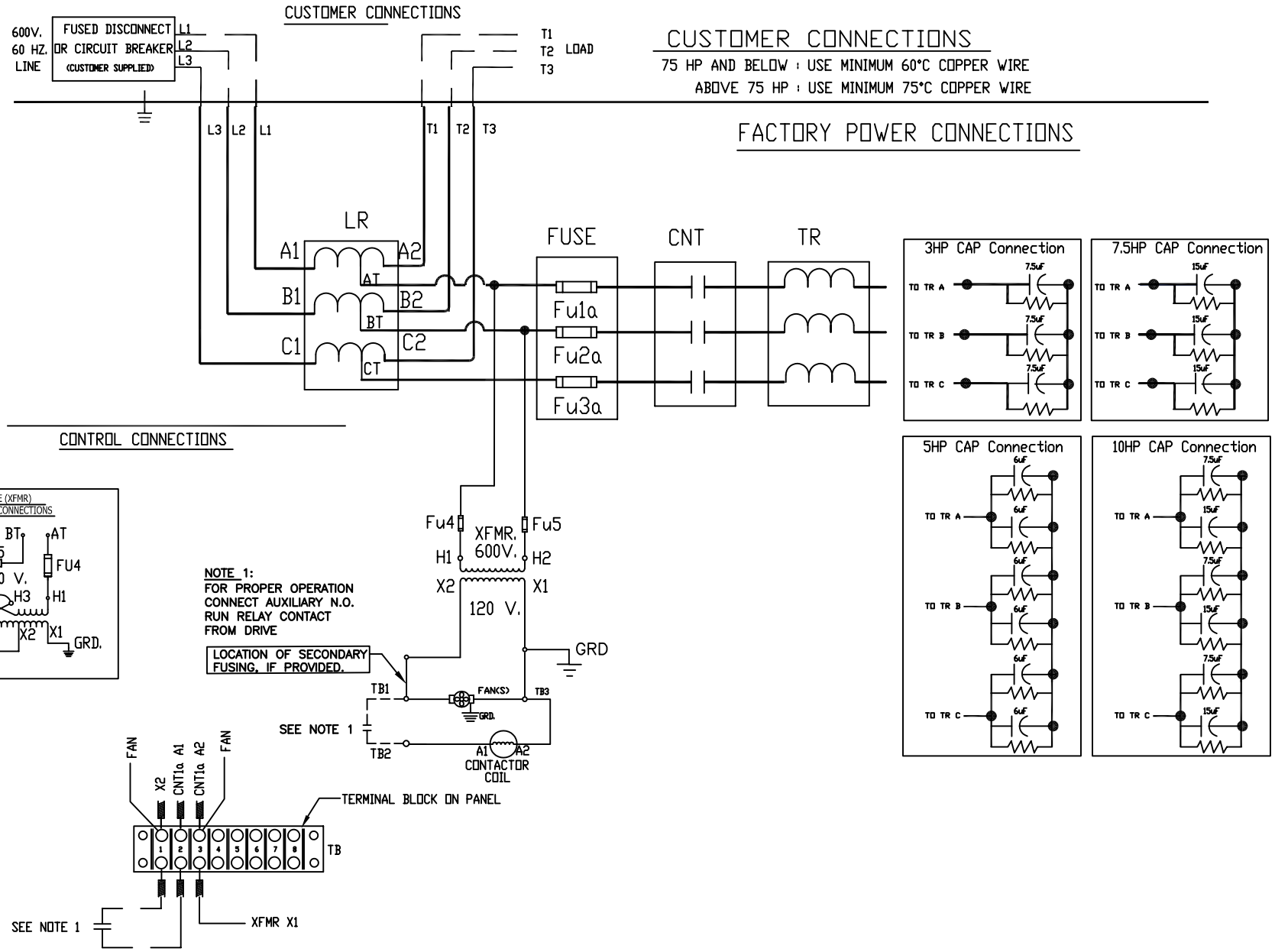

TOLERANCES (EXCEPT AS NOTED)	THE INFORMATION AND DESIGNS CONTAINED IN THIS DRAWING ARE CONFIDENTIAL AND THE PROPRIETARY PROPERTY OF ALLIENT INC. AND ITS SUBSIDIARIES. NEITHER THIS DESIGN NOR ANY INFORMATION CONTAINED IN THIS DRAWING MAY BE REPRODUCED OR DISCLOSED TO OTHERS WITHOUT THE EXPRESS WRITTEN CONSENT OF ALLIENT INC. AND ITS SUBSIDIARIES.
DECIMAL .XX ±.01 .XXX±.005	
FRACTIONAL ± 1/32	
ANGULAR ± 1/2°	

NO	ECO	REVISION	DATE	BY
A	6762	XFMR updates	10/15/24	JSG

DRAWN BY: DSW
DATE: 7/11/19

Allient Power
W132 N10611 Grant Drive
Germantown, WI 53022
©Allient Inc. 2024

HarmonicGuard Passive 600V
3 -10 HP Type 3R W/ CNT

SCALE
DWG. NO. 31663-4
SHT. 1 OF 1