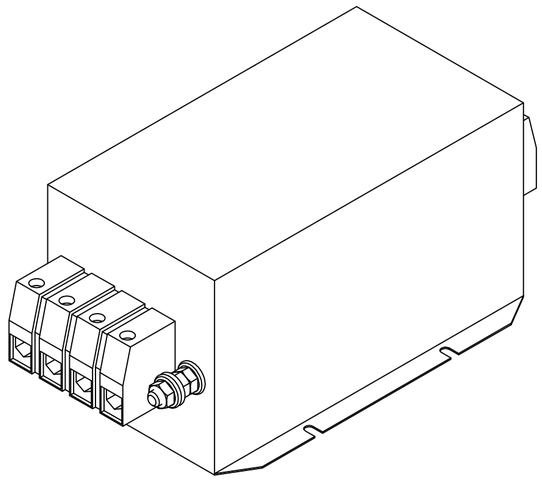

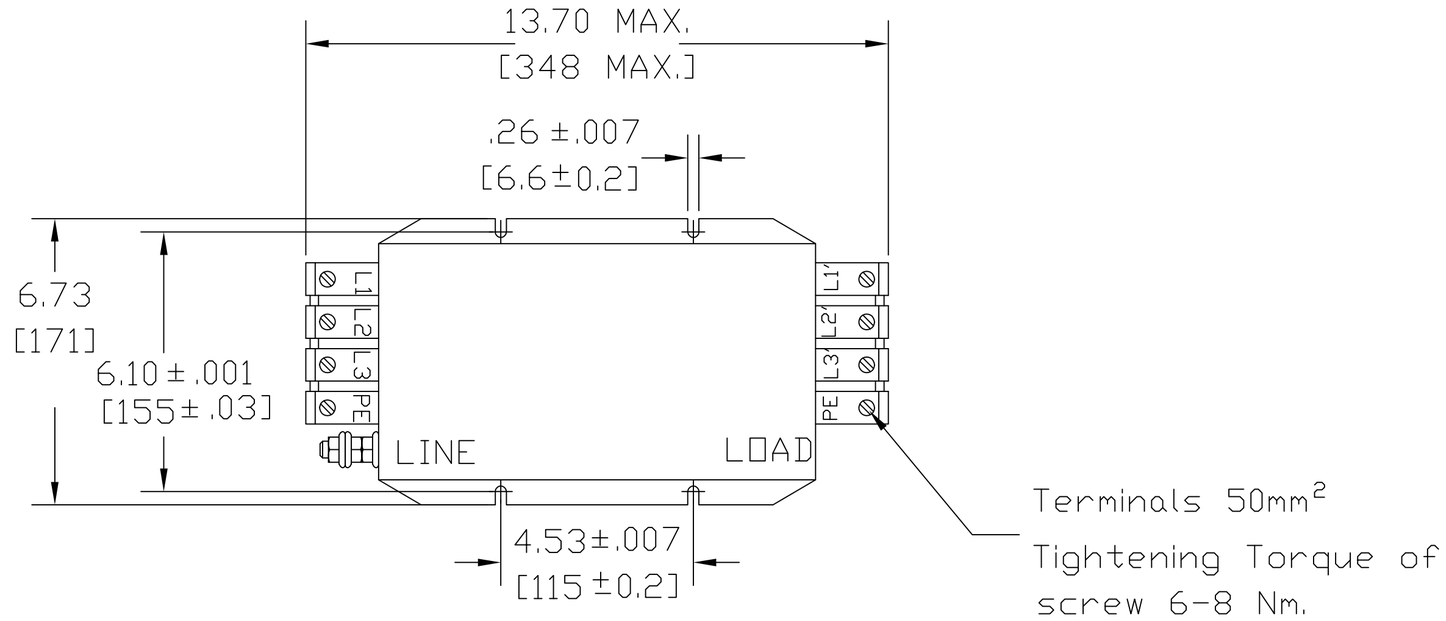

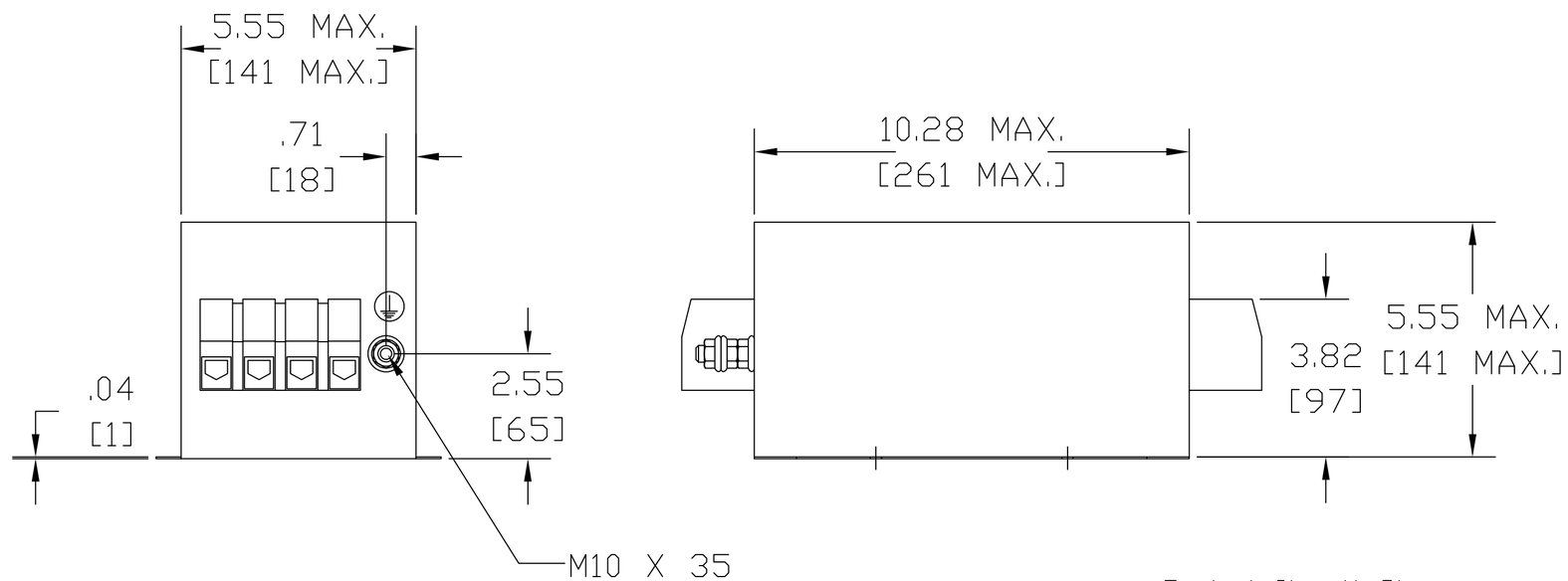

Technical data and measuring conditions.

Rated Voltage V_R	760/440 V AC, 50/60Hz.
Rated Current I_R	Referred to 40 °C ambient temperature
Test Voltage V_{test}	3270 V DC, 2 s (line/line) 3000 V DC, 2 s (line/case)
Overload Capability (thermal)	1.5 . I_R for 3 min per hour or 2.5 . I_R for 30 s per hour
Leakage Current I_{leak}	At 690 V AC, 50 Hz.
Climatic Category (IEC 60068-1)	25/100/21 (-25 °C/+100 °C/21 days damp heat test)
Approval Standards	EN 133200, UL 1283, CSA C22.2 No. 8
Approval Markings	UR, cUR

Typical Circuit Diagram.

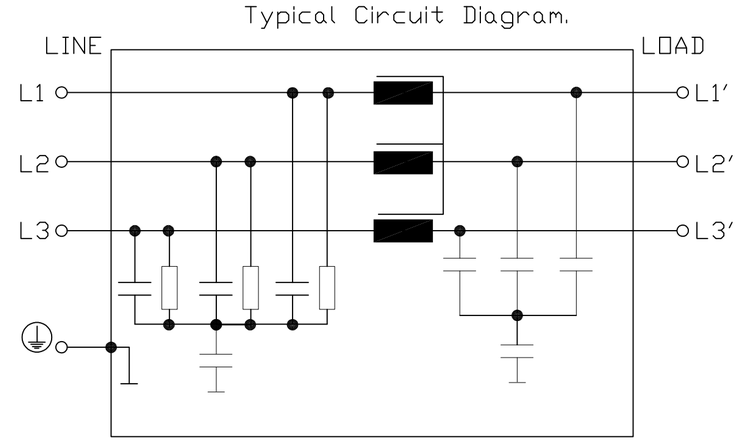

V_R AC V	I_R A	Terminal cross section mm²	I_{leak} mA	$R_{typ.}$ m ohm	Approx. Weight kg. / lbs.
760/440	150	50	< 12	0.4	10 / 22

NO	REVISION	DATE	BY
B	ECO 3959 ADDED	4/24/17	JRN
	APPROVAL MARKINGS		
A	UPDATE APPROVALS	6/13/11	DSW

TOLERANCES (EXCEPT AS NOTED)
DECIMAL .XX ±.02 .XXX±.01
FRACTIONAL ± 1/32
ANGULAR ± 1/2°

TCI® W132 N10611 Grant Drive Germantown, WI 53022

KRF FILTER
KRF0150VTB, 600-690V, 150A

DRN. BY DSW | DATE 1/07/2010 | DWG. NO. C KRF0150VTB
SCALE TO FIT | APRVD. | SHT. 1 OF 1