GENERAL PURPOSE, 1/3R, COLOR: WHITE.

220 LBS : APPROX WEIGHT.

KMG HIGH PERFORMANCE OUTPUT FILTER

PART NUMBER: KMG110AG3R0000

FLA: 110 | DRAWING#: 103901DG

SYSTEM VOLTAGE: 480V | SCHEMATIC: 26736

HZ: 80

PHASE: 3 | ENCLOSURE TYPE: 1/3R

MOTORGUARD

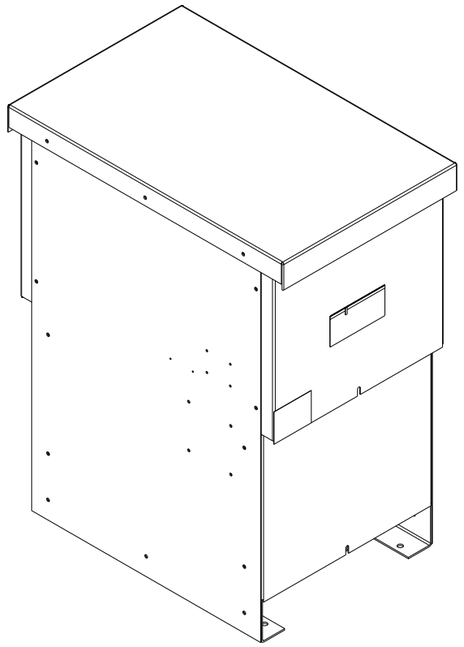

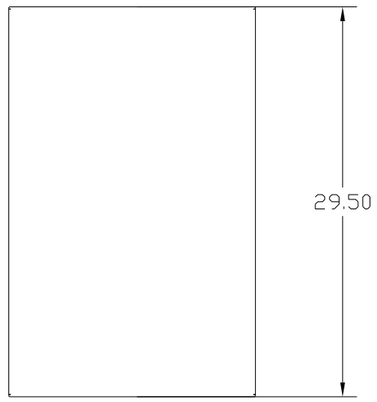


GROUND LUG
WIRE RANGE: 2/0-6 AWG
TORQUE: 120 LB-IN

CUSTOMER CONNECTIONS
(.28 DIA HOLES 6 PLACES.)

T1 T2 T3

U V W

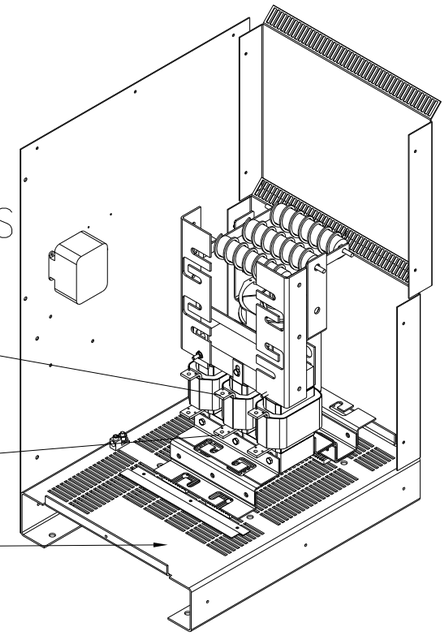

CUSTOMER WIRE ENTRANCE
AND EXIT LOCATION.

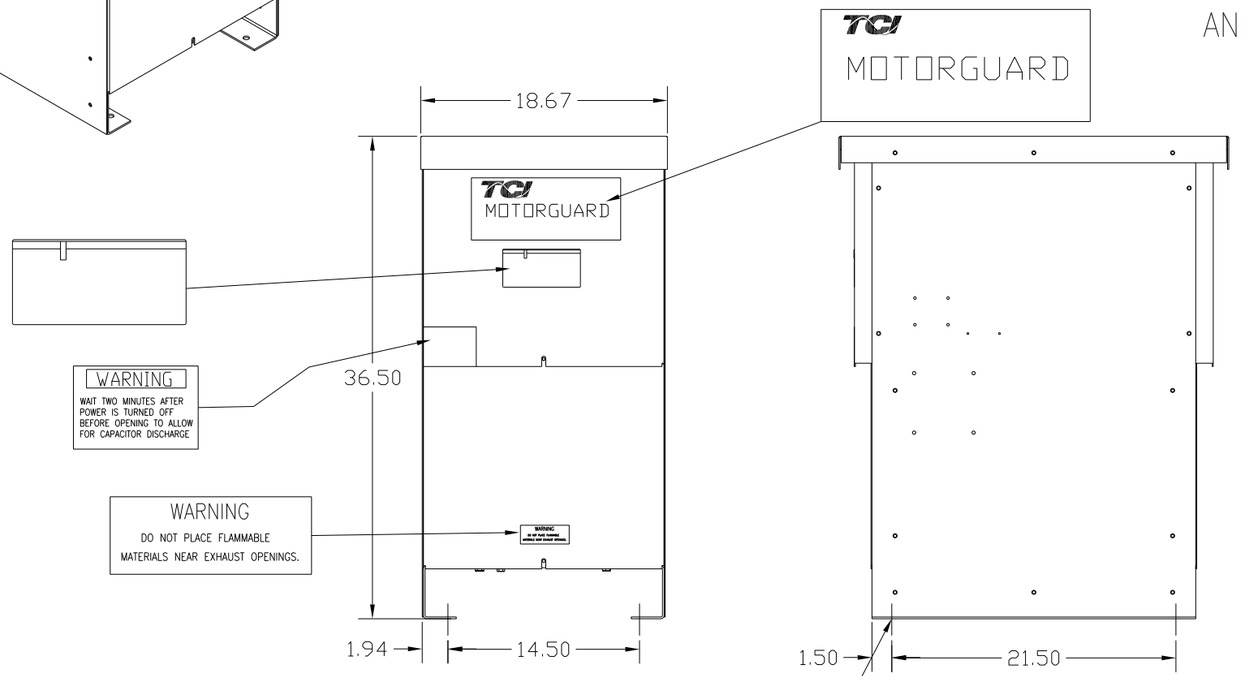


.56 DIA HOLES
4 PLACES.

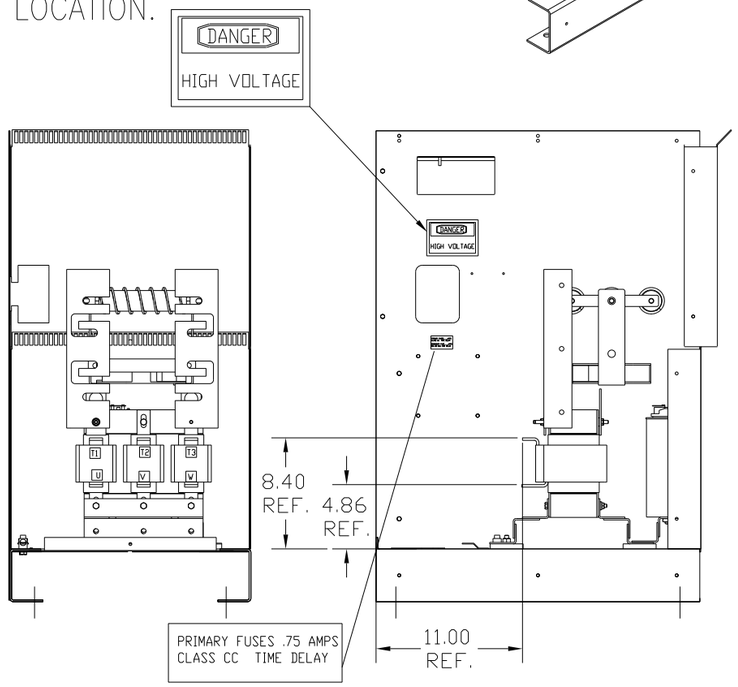


CUSTOMER IS RESPONSIBLE FOR INSTALLATION
TO MEET ALL NATIONAL AND LOCAL ELECTRICAL CODES.

PART NUMBER: KMG110AG3R0000

FOR SCHEMATIC SEE DRAWING # 26736.

| NO | REVISION | DATE | BY |
|---|---|---|---|
| | | | |

TOLERANCES (EXCEPT AS NOTED)
DECIMAL
.XX ±.03
.XXX±.01
FRACTIONAL
± 1/32
ANGULAR
± 1/2°

TCI 7878 N. 86th STREET MILWAUKEE, WI 53224

KMG, LRC FILTER STANDARD
110 AMP 480/3/80, 1/3R

DRN. BY DSW | DATE 01/08/09 | DWG. NO. C 103901DG
SCALE TO FIT | APRVD. | SHT. 1 OF 1