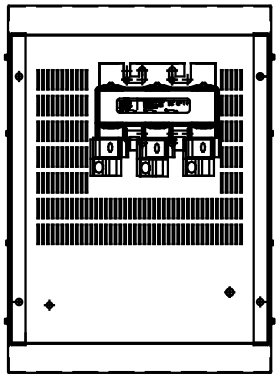

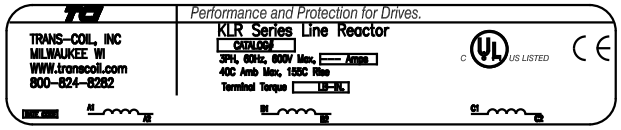

LABEL PLACED ON INSIDE WALL OF CABINET.

CATALOG NO	VOLTS(V.)	__mH±10%	__AMPS(A)	APPROX WT-LBS
KLRUL250BPTE3R	7.20	.044	250	127
KLRUL250FPTE3R	8.62	.053	250	127

LUG WIRE RANGE FOR REACTOR.	ONE 600MCM-4 TWO 250MCM-1/0, AL. OR CU.
TIGHTENING TORQUE.	500 LB-IN

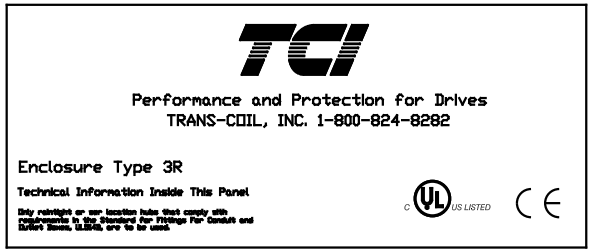

LABEL PLACED ON FRONT OF CABINET.

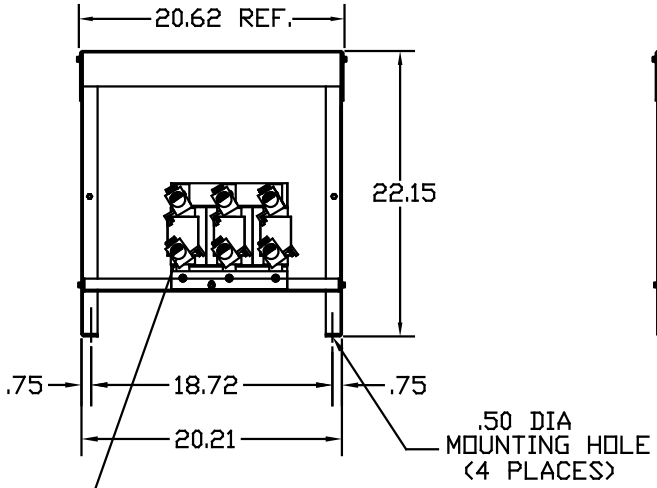

NOTE: ROTATED AS NEEDED TO MEET CLEARANCE BETWEEN TERMINAL OR LUGS (PHASE TO PHASE). ALSO TO MEET CLEARANCE FROM TERMINALS OR LUGS TO GROUNDING SURFACE.

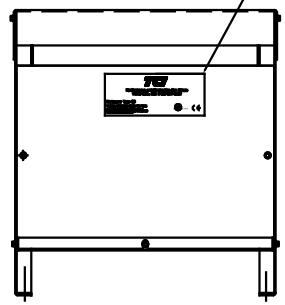

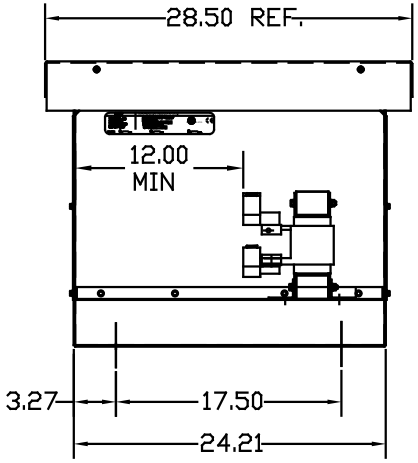

VENDOR LILLY POWDER COATINGS, INC.
PRODUCT CODE 312E
COLOR PEBBLE GRAY
POWDER TYPE POLYESTER POLYURETHANE

PAINT SUITABLE FOR OUTDOOR APPLICATION PER UL TYPE 3R AND APPLIED PER A UL ACCEPTED DTW2 COATING PROGRAM.

CUSTOMER IS RESPONSIBLE FOR INSTALLATION TO MEET ALL LOCAL AND NATIONAL CODES

NO	REVISION	DATE	BY

TOLERANCES (EXCEPT AS NOTED)
DECIMAL .XX ±.03 .XXX±.01
FRACTIONAL ±1/32
ANGULAR ±1/2°

7878 N. 86th STREET
MILWAUKEE, WI 53224

KLR FRAME G (ILSCO LUGS)
TYPE 3R ENCLOSURE

DRN. BY DSW | DATE 10/04/04 | DWG. NO. B KLRGE3R-1DG
SCALE TO FIT | APRVD. | SHT. 1 OF 1