CATALOG NO	VOLTS(V.)	__mH-±10%	__AMPS(A)	APPROX WT-LBS
KLR750DCB	17.24	.035	750	270
KLR750ECB	28.74	.059	750	260

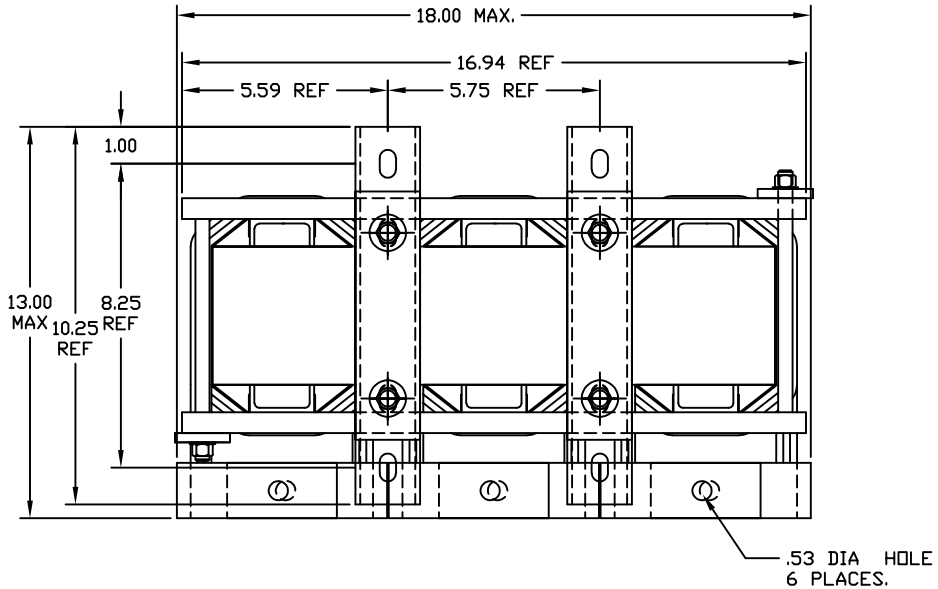

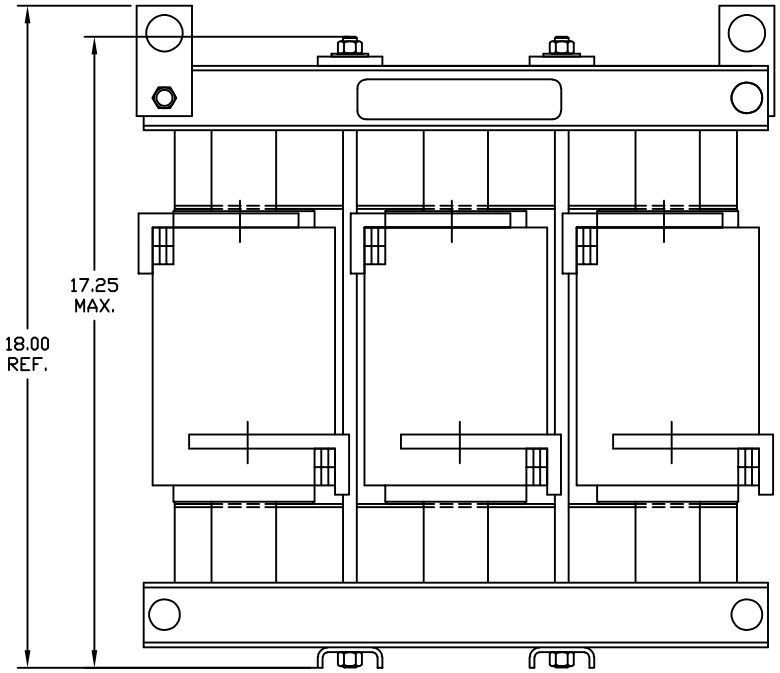

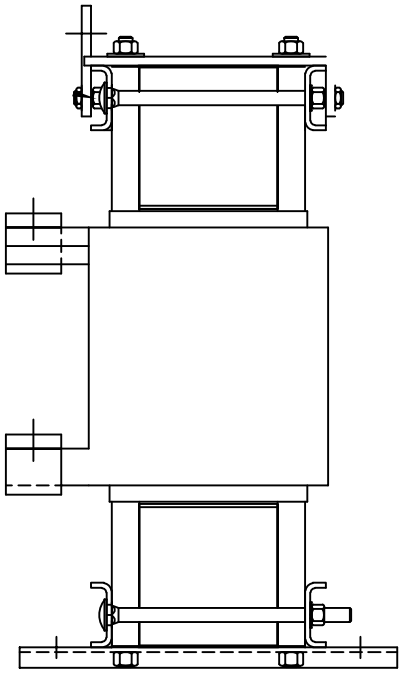

Material(s) Shall be RoHS Compliant

NO	REVISION	DATE	BY
C	5031, Remove KLR750ACB	1/15/20	DSW
C	5014, Remove KLR750CCB	12/23/19	DSW
B	2311, WASHERS KEPS	08/06/04	DSW
A	2235 LABEL UPDATED	06/09/03	DSW

TOLERANCES (EXCEPT AS NOTED)
DECIMAL .XX ±.25 .XXX±.10
FRACTIONAL ± 1/16
ANGULAR ± 1°

TCI® W132 N10611 Grant Drive Germantown, WI 53022

SINE-GUARD REACTOR
KLR CB'S (FRAME X)

DRN. BY BW | DATE 8/20/00 | DWG. NO. C KLR-56DG
SCALE 3/8"=1" | APRVD. | SHT.1 OF1