PART #	RATED AMPS	AMPS MAX	APPROX WT-LBS
KDSI3B	44	44	48

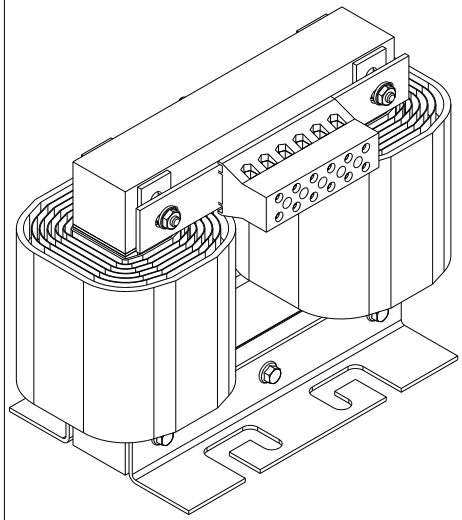

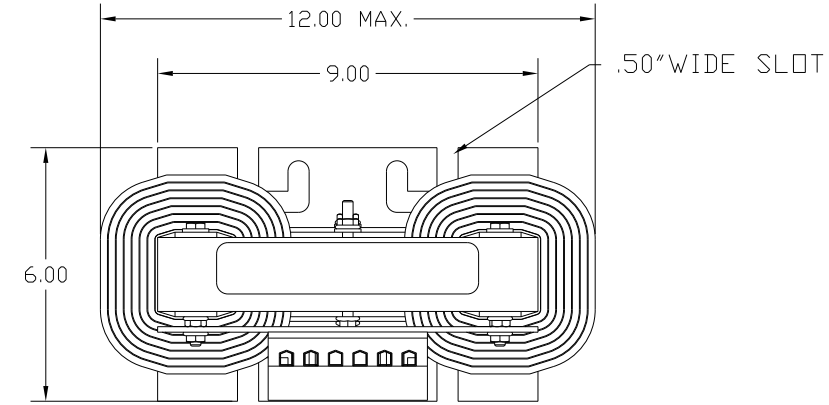

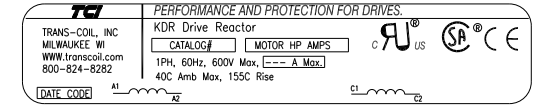

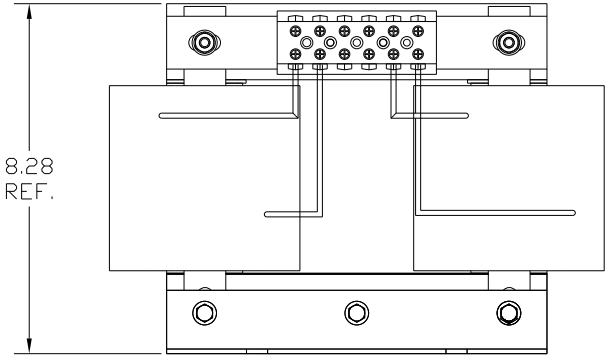

TERMINAL BLOCK TORQUE(LB-IN)=CUSTOMER WIRE
35 = 1 AWG THRU 4 AWG
30 = 6 AWG THRU 14 AWG
25 = 16 AWG THRU 20 AWG
20 = 22 AWG

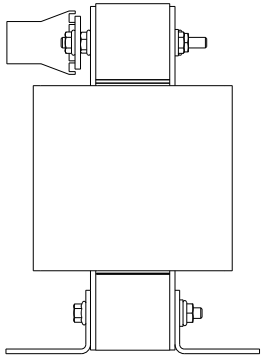

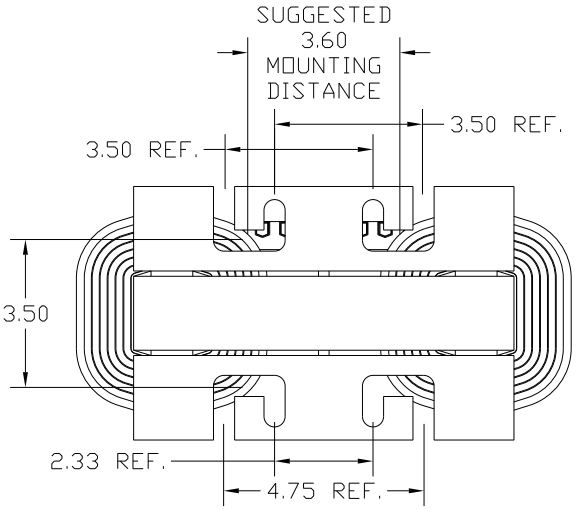

44 AMP Filter

NO	REVISION	DATE	BY
A	2661 ADD CE TO LABEL	3/25/10	DSW

TOLERANCES (EXCEPT AS NOTED)
DECIMAL .XX ±.03 .XXX±.01
FRACTIONAL ±1/32
ANGULAR ±1/2°

TCI 7878 N. 86th STREET MILWAUKEE, WI 53224

SINGLE PHASE TR. REACTOR 44A MAX , 480V (KDSI3B)

DRN. BY DSW | DATE 12/22/09 | DWG. NO. C 104156DG
SCALE TO FIT | APRVD. | SHT. 1 OF 1