Part Number	Horsepower (HP)	Amps (A)	Inductance (uH)	Weight (LBS)	Terminal Hole Size (Inches)	Available Lug Kit
KDRX3TE3R	400	477	154	450	0.53	SLK13

Top View

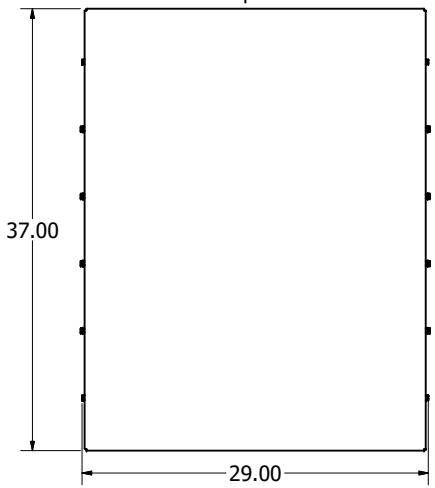

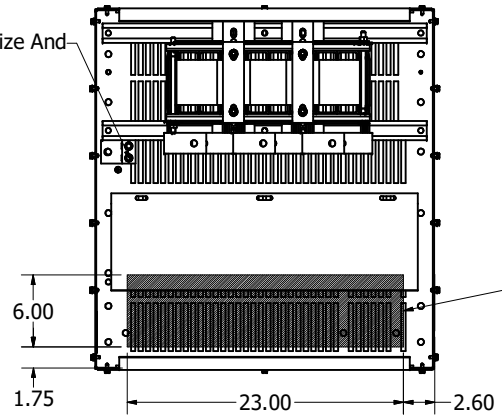

Front View With Front Cover

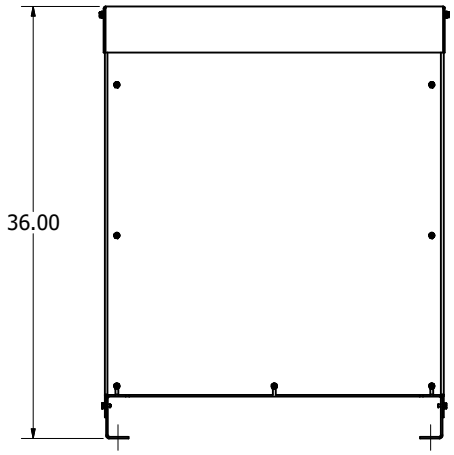

Front View Without Front Cover

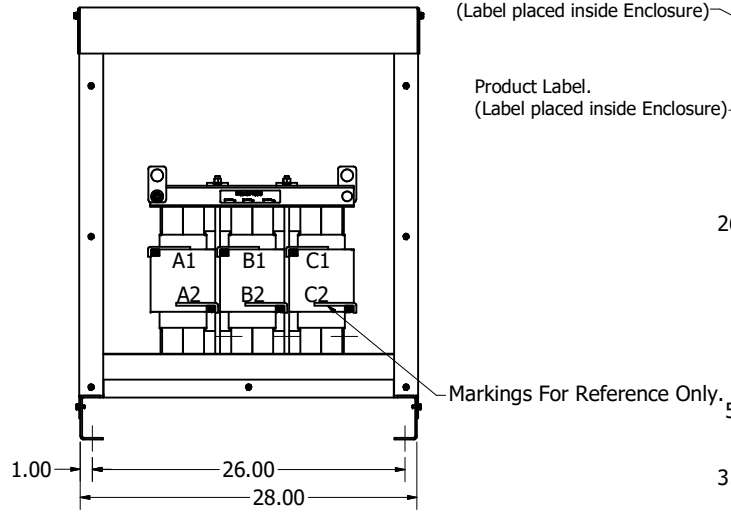

Side View

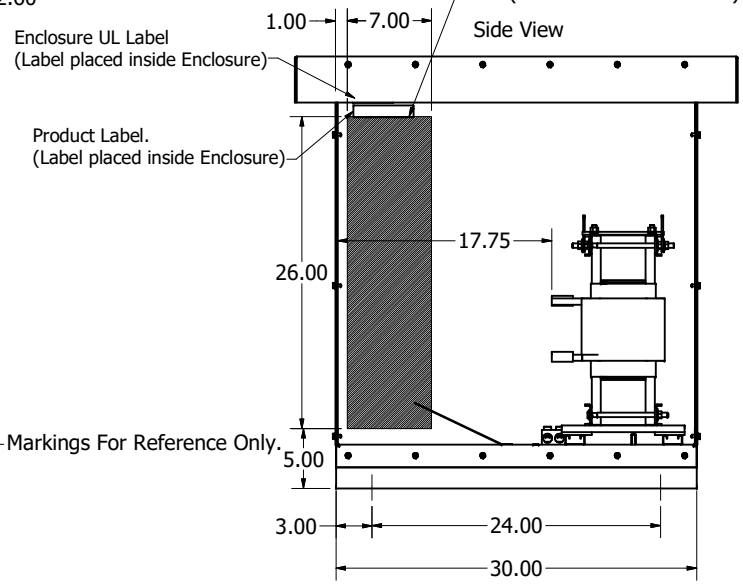

Bottom View

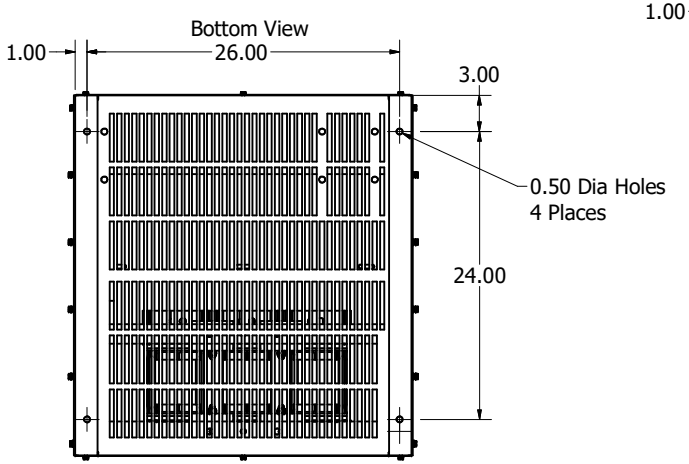

Wiring Diagram

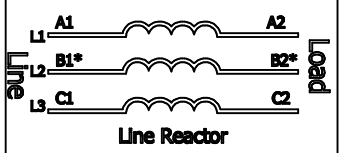

Line Reactor

* For single phase applications, use coils A and C, Isolate terminals B1 and B2.

Note:
1. UL file number: cULus Listed File E116124.
2. KDR Drive Reactors Comply With The Thermal and Altitude Standards Set Forth by NEMA ST20-1992.
3. For Terminal Torques And Wire Size See, KDR IOM Manual, Part Number 30895
4. Material(s) Shall be RoHS Compliant
5. Customer Is Responsible For Installation To Meet All National And Local Electrical Codes.

DIMENSIONS IN INCHES (EXCEPT AS NOTED)
TOLERANCES (EXCEPT AS NOTED)
DECIMAL
.XX ± .25
.XXX ± .10
FRACTIONAL
± 1/32
ANGULAR
± 1°

THE INFORMATION AND DESIGNS CONTAINED IN THIS DRAWING ARE CONFIDENTIAL AND THE PROPRIETARY PROPERTY OF ALLIENT INC. AND ITS SUBSIDIARIES. NEITHER THIS DESIGN NOR ANY INFORMATION CONTAINED IN THIS DRAWING MAY BE REPRODUCED OR DISCLOSED TO OTHERS WITHOUT THE EXPRESS WRITTEN CONSENT OF ALLIENT INC. AND ITS SUBSIDIARIES.

NO	ECO	REVISION	DATE	BY
A		As Designed	10/12/26	DSW

DRN. BY: DSW
DATE: 10/12/26

Allient Power
W132N10611 Grant Drive
Germantown, WI 53022
© 2026 Allient Inc.

KDRX3TE3R
480V, 477A, 3R, Input Line Inductor, 10%

SCALE: 1/8
DRN. NO. 109977DG
SIZE C
SHT.1 OF 1