CATALOG NO	VOLTAGE	NEC MOTOR HP	NEC MOTOR CURRENT	WATTS LOSS	APPROX. WEIGHT-LBS	TORQUE (LB-IN)
KDRULL6HE3R	480	500	590	1021	305	SEE BELOW

LUG WIRE RANGE FOR REACTOR.	TWO 600MCM-2, AL. OR CU.
TIGHTENING TORQUE.	500 LB-IN

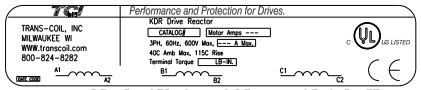

LABEL PLACED ON INSIDE WALL OF CABINET.

NOTE 1: WATTS LOSS WILL VARY DUE TO FUNDAMENTAL FREQUENCY, CARRIER FREQUENCY AND OTHER SYSTEM CHARACTERISTICS.

KDR DRIVE REACTORS COMPLY WITH THE THERMAL AND ALTITUDE STANDARDS SET FORTH BY NEMA ST20-1992..

NEC MOTOR CURRENTS SHOWN IN THE 208/240 VOLT CHART ARE BASED ON HORSEPOWER AT 208 VOLT. 575/600 VOLT CHART USE THE 575 VOLT CURRENT RATING.

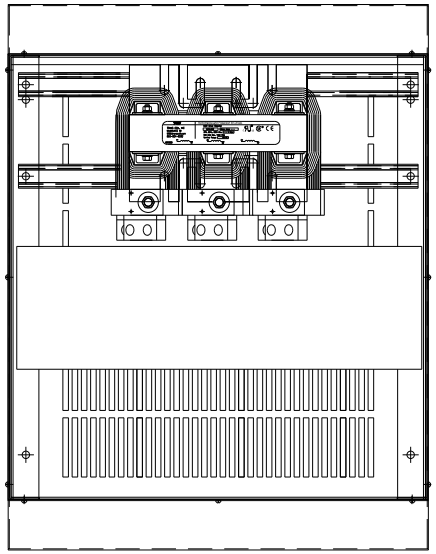

NOTE: ROTATED AS NEEDED TO MEET CLEARANCE BETWEEN TERMINAL OR LUGS (PHASE TO PHASE). ALSO TO MEET CLEARANCE FROM TERMINALS OR LUGS TO GROUNDING SURFACE.

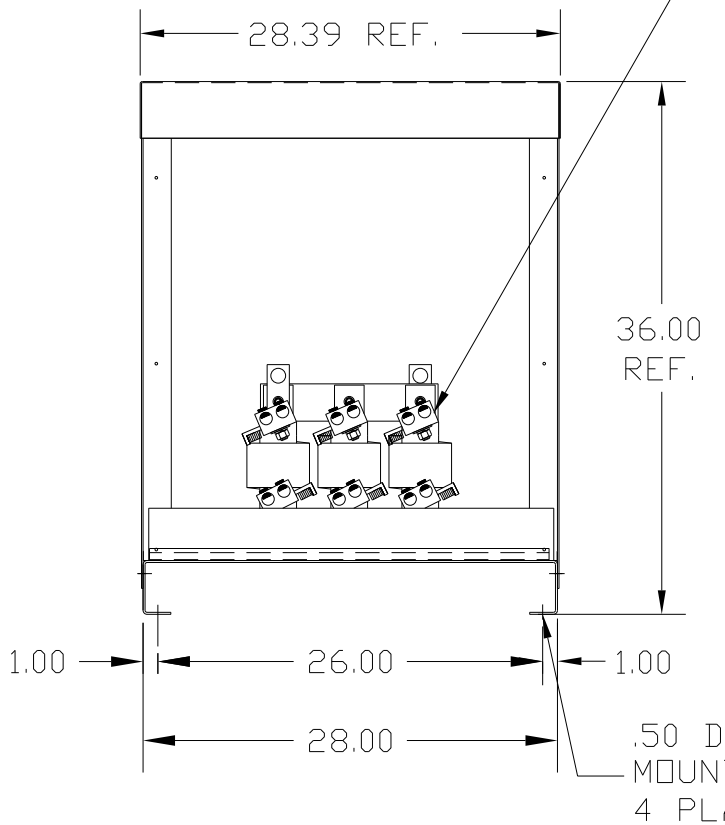

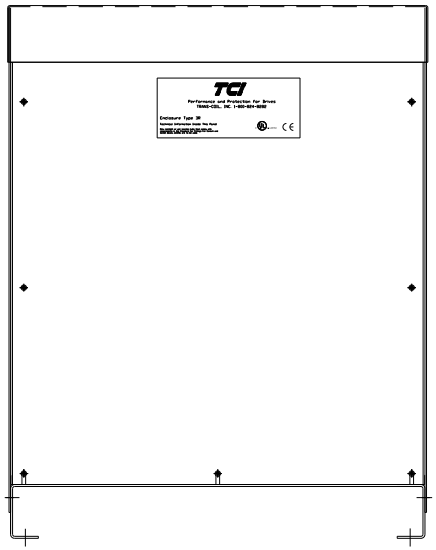

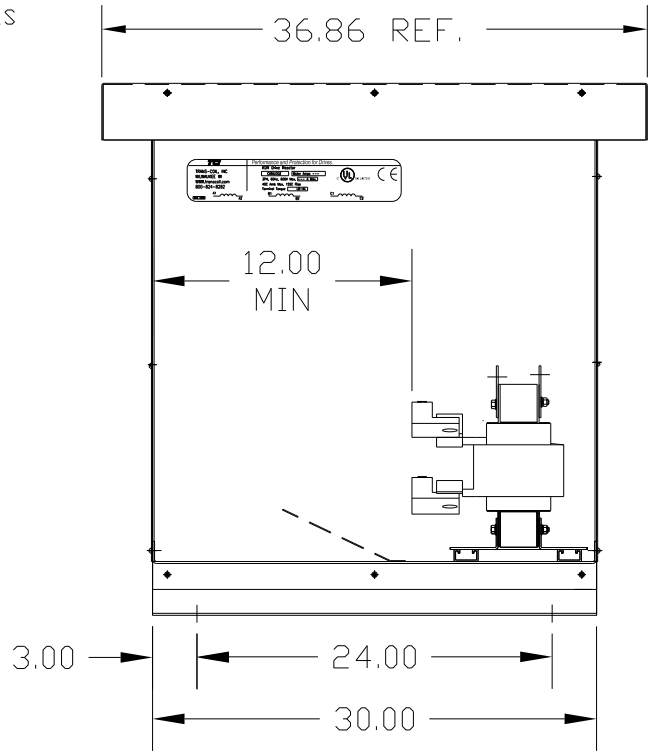

CUSTOMER IS RESPONSIBLE FOR INSTALLATION TO MEET ALL NATIONAL AND LOCAL ELECTRICAL CODES.

NOTE: USE ONLY HUBS OR FITTINGS THAT COMPLY WITH UL514B FOR TYPE 3R ENCLOSURES.

FINISH:
VENDOR - LILLY POWDER COATINGS, INC.
PRODUCT CODE - 312E
COLOR - PEBBLE GRAY
POWDER TYPE - POLYESTER-POLYURETHANE

PAINT SUITABLE FOR OUTDOOR APPLICATION PER UL TYPE 3R AND APPLIED PER A UL ACCEPTED DTVV2 COATING PROGRAM.

NO	REVISION	DATE	BY

TOLERANCES (EXCEPT AS NOTED)
DECIMAL
.XX ±.03
.XXX±.01
FRACTIONAL
± 1/32
ANGULAR
± 1/2°

TCI 7878 N. 86th STREET MILWAUKEE, WI 53224

KDR DRIVE REACTOR
480V, ENCLOSED, TYPE 3R

DRN. BY DSW | DATE 9/22/04 | DWG. NO. B KDRULL6HE3RDG
SCALE | APRV'D. | SHT. 1 OF 1