CATALOG NO	VOLTAGE	NEC MOTOR HP	NEC MOTOR CURRENT	WATTS LOSS	APPROX. WEIGHT-LBS	TORQUE (LB-IN)
KDRULI41HE3R	575/600	100	99	268	90	SEE BELOW

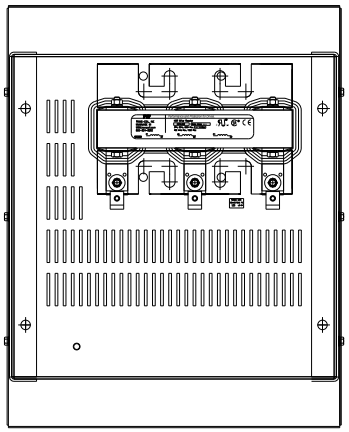

LUG WIRE RANGE FOR REACTOR.	2/0-6, AL OR CU.
TIGHTENING TORQUE.	120 LB-IN

NOTE 1: WATTS LOSS WILL VARY DUE TO FUNDAMENTAL FREQUENCY, CARRIER FREQUENCY AND OTHER SYSTEM CHARACTERISTICS.

KDR DRIVE REACTORS COMPLY WITH THE THERMAL AND ALTITUDE STANDARDS SET FORTH BY NEMA ST20-1992..

NEC MOTOR CURRENTS SHOWN IN THE 208/240 VOLT CHART ARE BASED ON HORSEPOWER AT 208 VOLT. 575/600 VOLT CHART USE THE 575 VOLT CURRENT RATING.

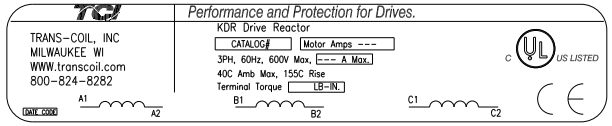

LABEL PLACED ON INSIDE WALL OF CABINET.

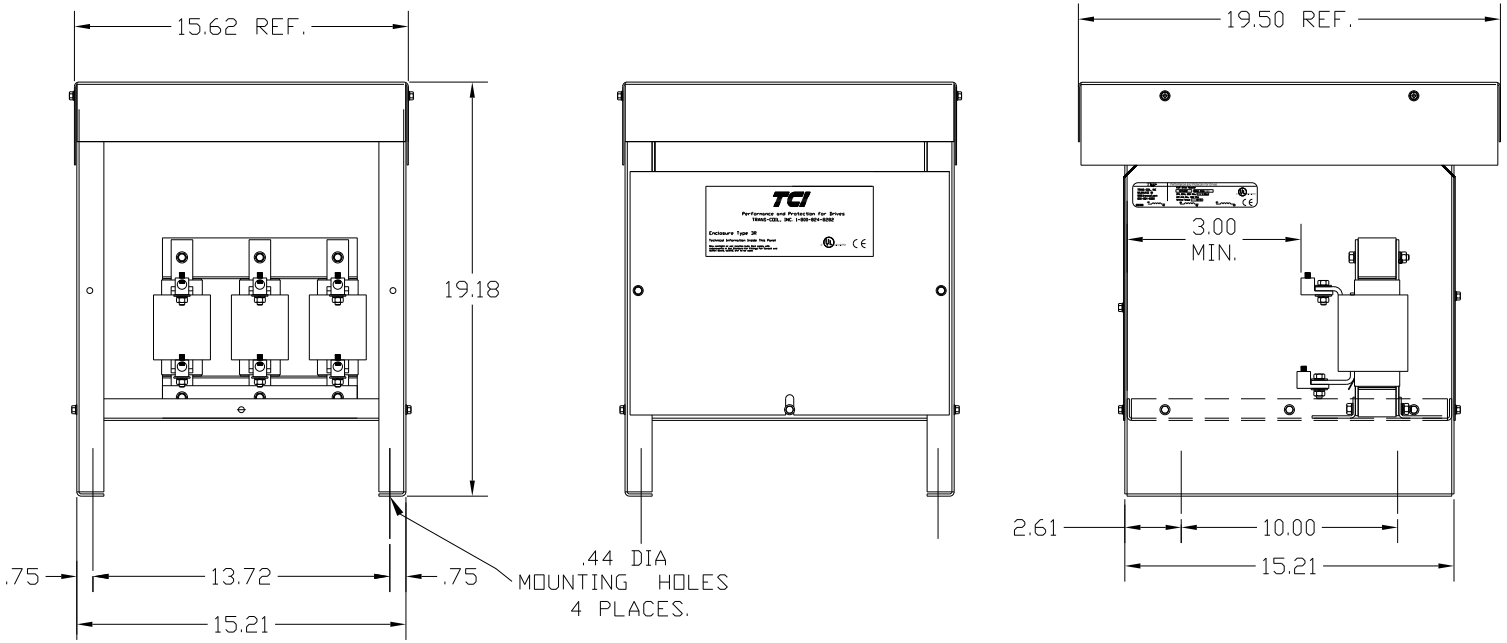

NOTE: USE ONLY HUBS OR FITTINGS THAT COMPLY WITH UL514B FOR TYPE 3R ENCLOSURES.

CUSTOMER IS RESPONSIBLE FOR INSTALLATION TO MEET ALL NATIONAL AND LOCAL ELECTRICAL CODES.

FINISH:
VENDOR - LILLY POWDER COATINGS, INC.
PRODUCT CODE - 312E
COLOR - PEBBLE GRAY
POWDER TYPE - POLYESTER-POLYURETHANE

PAINT SUITABLE FOR OUTDOOR APPLICATION PER UL TYPE 3R AND APPLIED PER A UL ACCEPTED DTVV2 COATING PROGRAM.

NO	REVISION	DATE	BY

TOLERANCES (EXCEPT AS NOTED)
DECIMAL .XX ±.03 .XXX±.01
FRACTIONAL ± 1/32
ANGULAR ± 1/2°

TCI 7878 N. 86th STREET MILWAUKEE, WI 53224

KDR DRIVE REACTOR 575V, ENCLOSED, TYPE 3R

DRN. BY DSW | DATE 9/20/04 | DWG. NO. KDRULI41HE3RDG
SCALE | APRVD. | SHT. 1 OF 1