CATALOG NO	VOLTAGE	NEC MOTOR HP	NEC MOTOR CURRENT	WATTS LOSS	APPROX. WEIGHT-LBS	TORQUE (LB-IN)
KDRULI41HE01	575/600	100	99	268	87	120

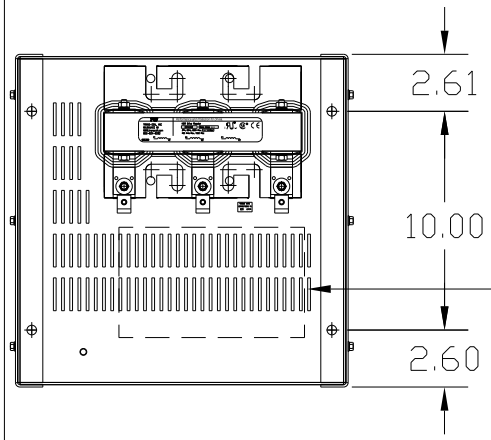

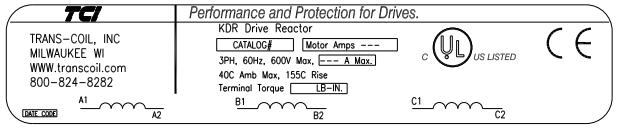

LABEL PLACED ON INSIDE WALL OF CABINET.

NEC MOTOR CURRENTS SHOWN IN THE 208/240 VOLT CHART ARE BASED ON HORSEPOWER AT 208 VOLT. 575/600 VOLT CHART USE THE 575 VOLT CURRENT RATING.

RECOMMENDED CONDUIT ENTRANCE AREA – LEFT FRONT SIDE, BOTTOM FRONT. RIGHT FRONT SIDE AND TOP.

LUG WIRE RANGE FOR REACTOR.	2/0-6, AL OR CU.
TIGHTENING TORQUE.	120 LB-IN

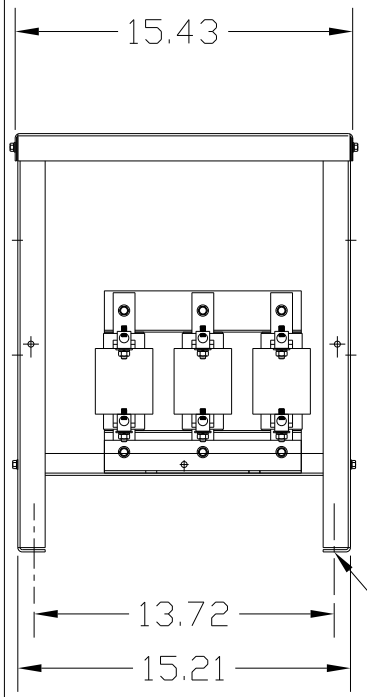

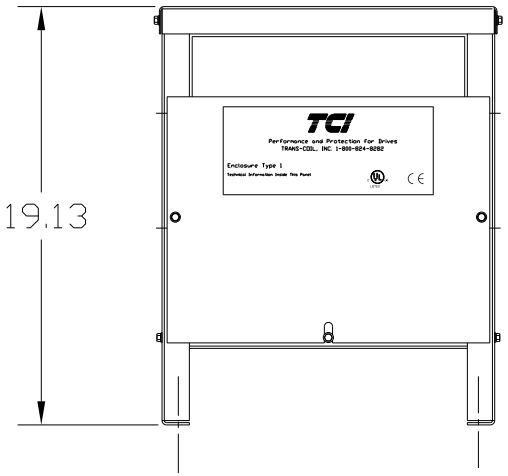

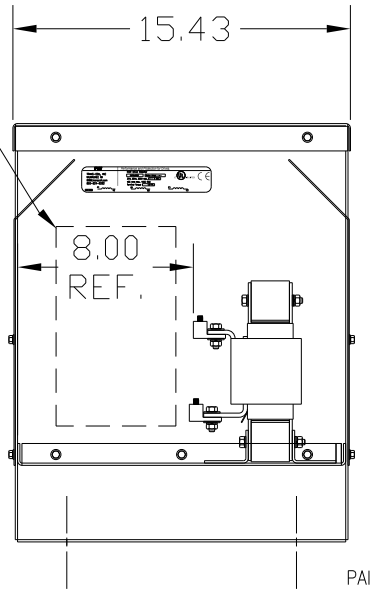

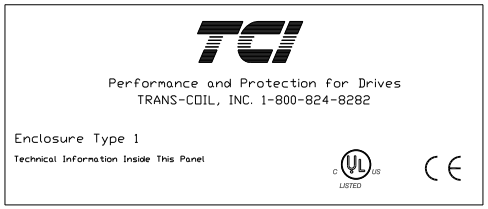

LABEL PLACED ON FRONT OF CABINET.

VENDOR LILLY POWDER COATINGS, INC.
PRODUCT CODE 312E
COLOR PEBBLE GRAY
POWDER TYPE POLYESTER POLYURETHANE

PAINT SUITABLE FOR OUTDOOR APPLICATION PER UL TYPE 3R AND APPLIED PER A UL ACCEPTED DTVV2 COATING PROGRAM.

.44 DIA MOUNTING HOLES 4 PLACES.

CUSTOMER IS RESPONSIBLE FOR INSTALLATION TO MEET ALL LOCAL AND NATIONAL CODES

NO	REVISION	DATE	BY

TOLERANCES (EXCEPT AS NOTED)
DECIMAL
.XX ± .03
.XXX ± .01
FRACTIONAL
± 1/32
ANGULAR
± 1/2°

TCI
7878 N. 86th STREET
MILWAUKEE, WI 53224

KDR DRIVE REACTOR
575V, ENCLOSED, TYPE 1

DRN. BY	DATE	DWG. NO.
DSW	7/06/04	B KDRULI41HE01DG
SCALE	APRVD.	SHT. 1 OF1