CATALOG NO	VOLTAGE	NEC MOTOR HP	NEC MOTOR CURRENT	WATTS LOSS	APPROX. WEIGHT-LBS	TORQUE (LB-IN)
KDRULI32PE01	575	200	192	SEE NOTE:1	111	275

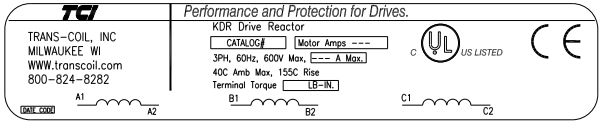

LABEL PLACED ON INSIDE WALL OF CABINET.

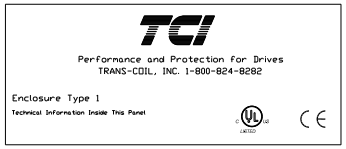

LABEL PLACED ON FRONT OF CABINET.

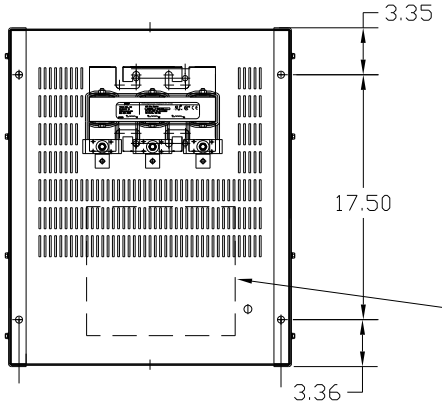

RECOMMENDED CONDUIT ENTRANCE AREA – LEFT FRONT SIDE, BOTTOM FRONT. RIGHT FRONT SIDE AND TOP.

NOTE 1: WATTS LOSS WILL VARY DUE TO FUNDAMENTAL FREQUENCY, CARRIER FREQUENCY AND OTHER SYSTEM CHARACTERISTICS.

KDR DRIVE REACTORS COMPLY WITH THE THERMAL AND ALTITUDE STANDARDS SET FORTH BY NEMA ST20-1992..

NEC MOTOR CURRENTS SHOWN IN THE 208/240 VOLT CHART ARE BASED ON HORSEPOWER AT 208 VOLT. 575/600 VOLT CHART USE THE 575 VOLT CURRENT RATING.

LUG WIRE RANGE FOR REACTOR.	250MCM-6, AL OR CU.
TIGHTENING TORQUE.	275 LB-IN

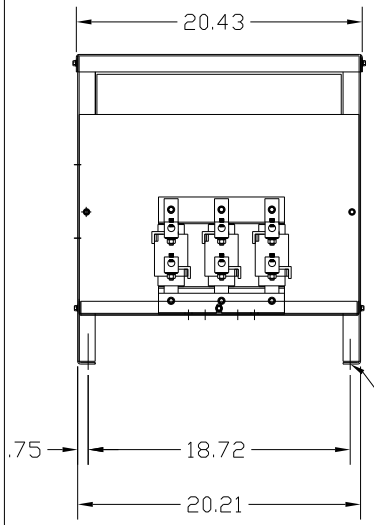

.50 DIA MOUNTING HOLE (4 PLACES)

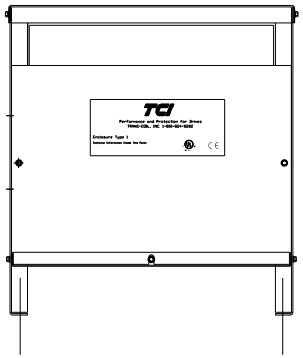

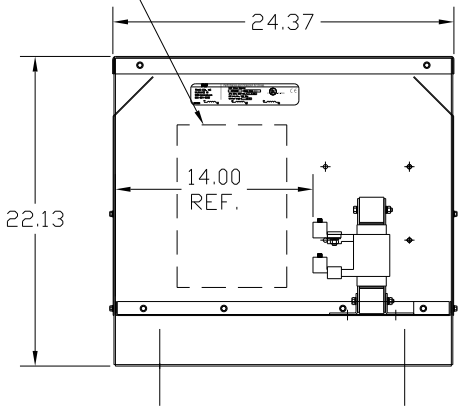

VENDOR LILLY POWDER COATINGS, INC.
PRODUCT CODE 312E
COLOR PEBBLE GRAY
POWDER TYPE POLYESTER POLYURETHANE

PAINT SUITABLE FOR OUTDOOR APPLICATION PER UL TYPE 3R AND APPLIED PER A UL ACCEPTED DTW2 COATING PROGRAM.

CUSTOMER IS RESPONSIBLE FOR INSTALLATION TO MEET ALL LOCAL AND NATIONAL CODES

NO	REVISION	DATE	BY

TOLERANCES (EXCEPT AS NOTED)
DECIMAL
.XX ±.03
.XXX± .01
FRACTIONAL
± 1/32
ANGULAR
± 1/2°

TCI
7878 N. 86th STREET
MILWAUKEE, WI 53224

KDR OUTPUT REACTOR
575V, ENCLOSED, TYPE 1

DRN. BY DSW
DATE 6/21/04
DWG. NO. B KDRULI32PE01DG
SHT. 1 OF1
SCALE
APRVD.