CATALOG NO	VOLTAGE	NEC MOTOR HP	NEC MOTOR CURRENT	WATTS LOSS	APPROX. WEIGHT-LBS	TORQUE (LB-IN)
KDRULI24LE01	208/240	100	273	276	117	500

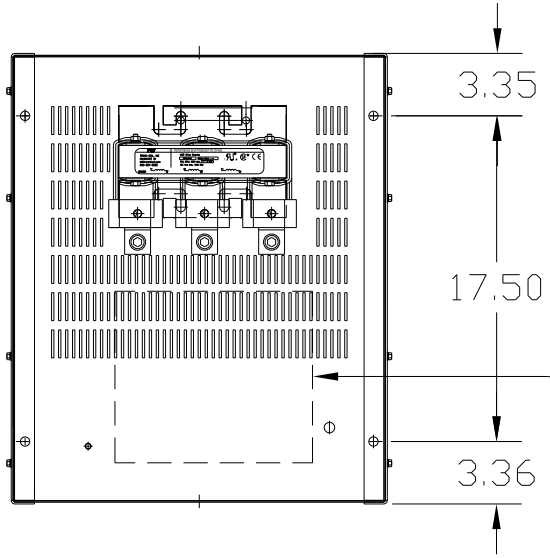

LUG WIRE RANGE FOR REACTOR.	ONE 600MCM-4 TWO 250MCM-1/0, AL. OR CU.
TIGHTENING TORQUE.	500 LB-IN

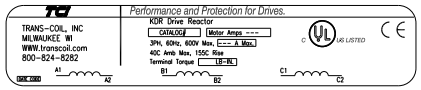

LABEL PLACED ON INSIDE WALL OF CABINET.

RECOMMENDED CONDUIT ENTRANCE AREA – LEFT FRONT SIDE, BOTTOM FRONT. RIGHT FRONT SIDE AND TOP.

NOTE 1: WATTS LOSS WILL VARY DUE TO FUNDAMENTAL FREQUENCY, CARRIER FREQUENCY AND OTHER SYSTEM CHARACTERISTICS.

KDR DRIVE REACTORS COMPLY WITH THE THERMAL AND ALTITUDE STANDARDS SET FORTH BY NEMA ST20-1992..

NEC MOTOR CURRENTS SHOWN IN THE 208/240 VOLT CHART ARE BASED ON HORSEPOWER AT 208 VOLT. 575/600 VOLT CHART USE THE 575 VOLT CURRENT RATING.

NOTE: LUGS ROTATED TO MEET CLEAREANCE (PHASE TO PHASE).
AND TO MEET CLEARANCE FROM LUGS TO GROUNDING SURFACE.

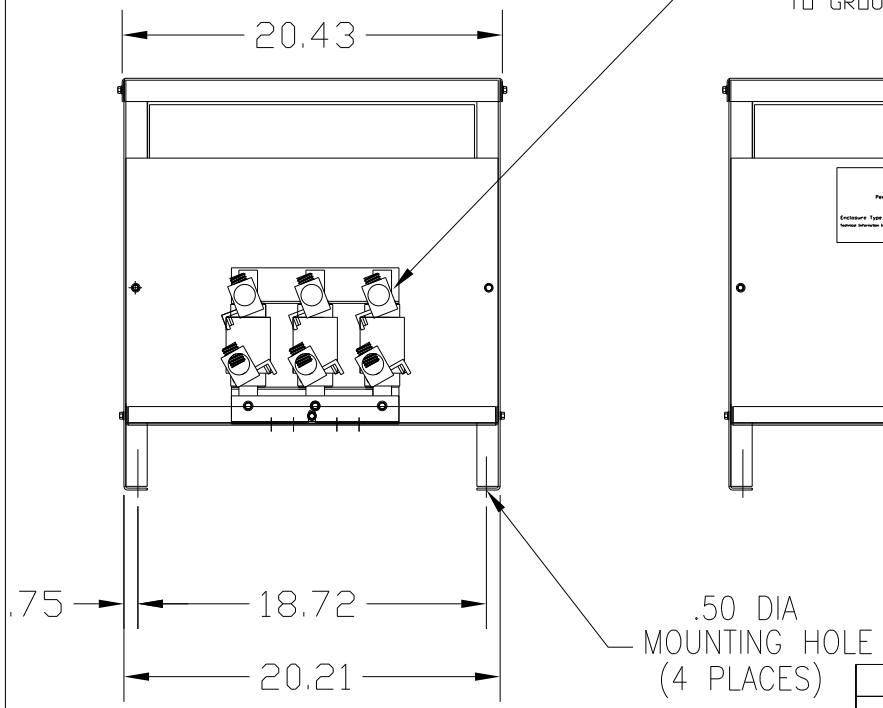

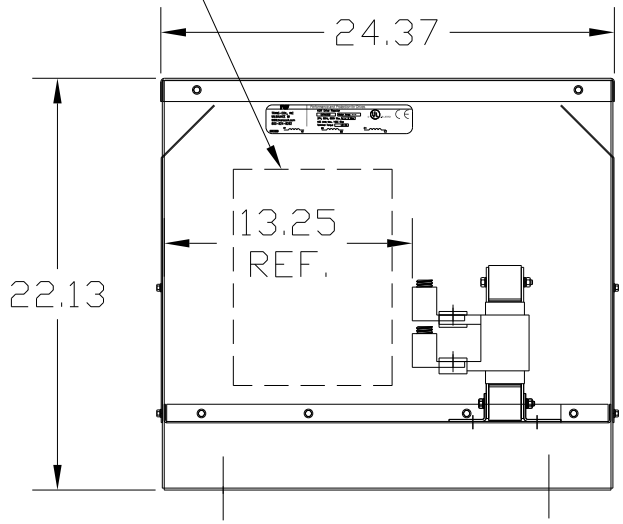

VENDOR LILLY POWDER COATINGS, INC.
PRODUCT CODE 312E
COLOR PEBBLE GRAY
POWDER TYPE POLYESTER POLYURETHANE

PAINT SUITABLE FOR OUTDOOR APPLICATION PER UL TYPE 3R AND APPLIED PER A UL ACCEPTED DTW2 COATING PROGRAM.

CUSTOMER IS RESPONSIBLE FOR INSTALLATION TO MEET ALL LOCAL AND NATIONAL CODES

NO	REVISION	DATE	BY

TOLERANCES (EXCEPT AS NOTED)
DECIMAL
.XX ±.03
.XXX±.01
FRACTIONAL
± 1/32
ANGULAR
± 1/2°

TCI
7878 N. 86th STREET
MILWAUKEE, WI 53224

KDR DRIVE REACTOR
240V, ENCLOSED, TYPE 1

DRN. BY	DATE	DWG. NO.
DSW	6/21/04	B KDRULI24LE01DG
SCALE	APRVD.	SHT. 1 OF1