CATALOG NO	VOLTAGE	NEC MOTOR HP	NEC MOTOR CURRENT	WATTS LOSS	APPROX. WEIGHT-LBS	TORQUE (LB-IN)
KDRULF32PE3R	575	75	77	SEE NOTE: 1	63	SEE BELOW

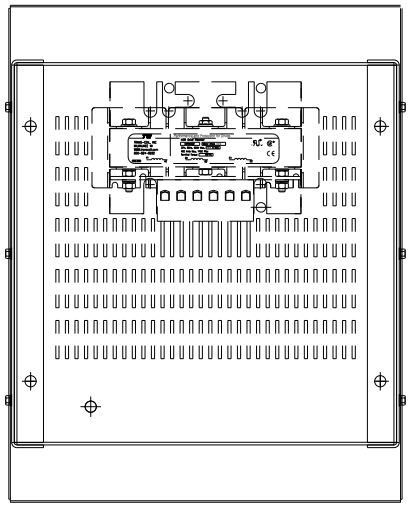

NOTE: A1, A2, B1, B2, C1, C2, MARKINGS ON TERMINAL BLOCK FOR REFERENCE ONLY.

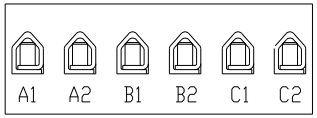

TERMINAL BLK MARKING

TORQUE(LB-IN)=CUSTOMER WIRE
35=1 AWG THRU 4 AWG
30=6 AWG THRU 14 AWG
25=16 AWG THRU 20 AWG
20=22 AWG

NOTE 1: WATTS LOSS WILL VARY DUE TO FUNDAMENTAL FREQUENCY, CARRIER FREQUENCY AND OTHER SYSTEM CHARACTERISTICS.

KDR DRIVE REACTORS COMPLY WITH THE THERMAL AND ALTITUDE STANDARDS SET FORTH BY NEMA ST20-1992..

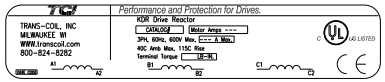

LABEL PLACED ON INSIDE WALL OF CABINET.

NEC MOTOR CURRENTS SHOWN IN THE 208/240 VOLT CHART ARE BASED ON HORSEPOWER AT 208 VOLT. 575/600 VOLT CHART USE THE 575 VOLT CURRENT RATING.

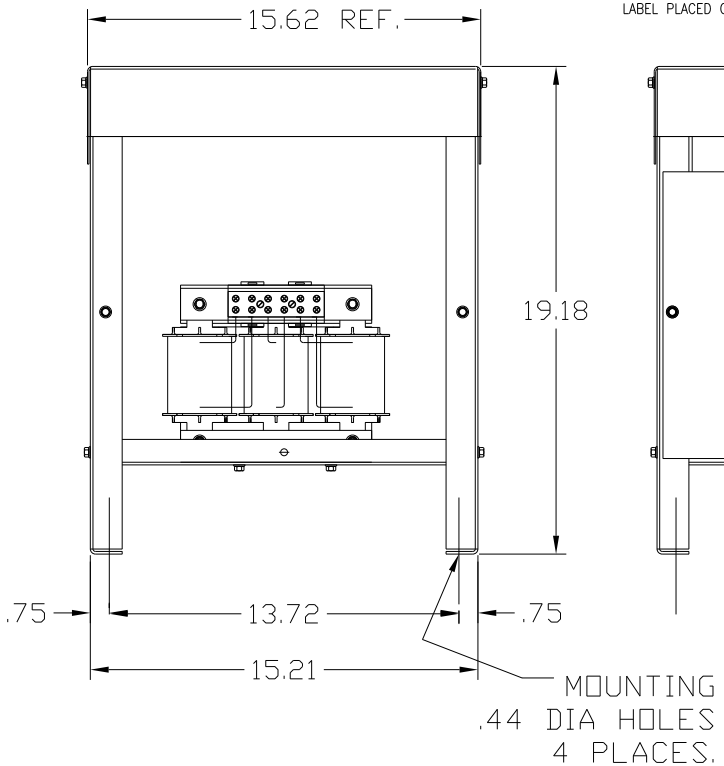

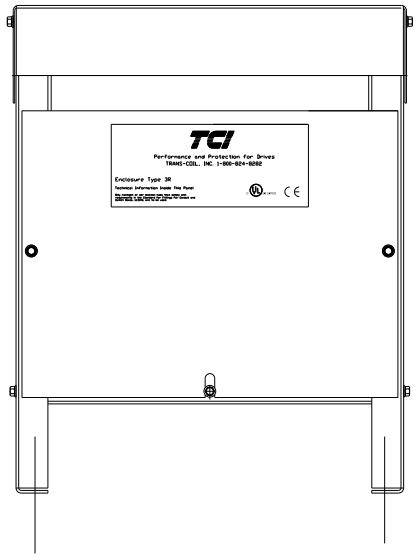

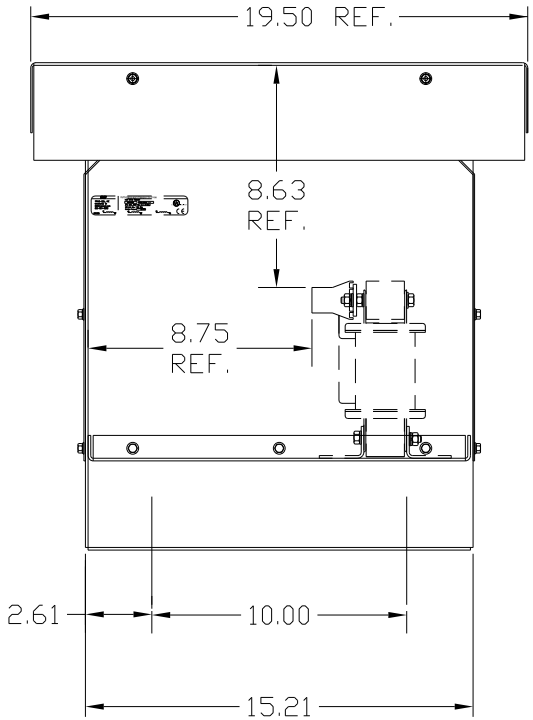

CUSTOMER IS RESPONSIBLE FOR INSTALLATION TO MEET ALL NATIONAL AND LOCAL ELECTRICAL CODES.

NOTE: USE ONLY HUBS OR FITTINGS THAT COMPLY WITH UL514B FOR TYPE 3R ENCLOSURES.

FINISH:
VENDOR - LILLY POWDER COATINGS, INC.
PRODUCT CODE - 312E
COLOR - PEBBLE GRAY
POWDER TYPE - POLYESTER-POLYURETHANE

PAINT SUITABLE FOR OUTDOOR APPLICATION PER UL TYPE 3R AND APPLIED PER A UL ACCEPTED DTVV2 COATING PROGRAM.

NO	REVISION	DATE	BY

TOLERANCES (EXCEPT AS NOTED)
DECIMAL .XX ±.03 .XXX±.01
FRACTIONAL ± 1/32
ANGULAR ± 1/2°

TCI 7878 N. 86th STREET MILWAUKEE, WI 53224

KDR OUTPUT REACTOR
575V, ENCLOSED, TYPE 3R

DRN. BY DSW | DATE 9/20/04 | DWG. NO. KDRULF32PE3RDG
SCALE | APRVD. | SHT. 1 OF1