CATALOG NO	VOLTAGE	NEC MOTOR HP	NEC MOTOR CURRENT	WATTS LOSS	APPROX. WEIGHT-LBS	TORQUE (LB-IN)
KDRULD3PE01	480	25	34	SEE NOTE: 1	20.50	20

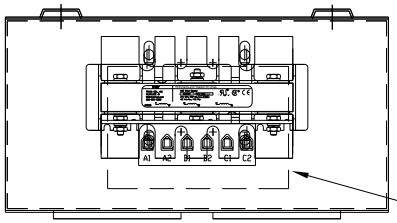

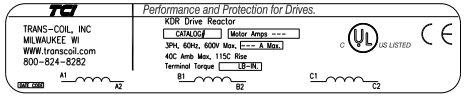

LABEL PLACED ON INSIDE WALL OF CABINET.

RECOMMENDED CONDUIT ENTRANCE AREA – TOP, LOWER LEFT SIDE, AND LOWER RIGHT SIDE.

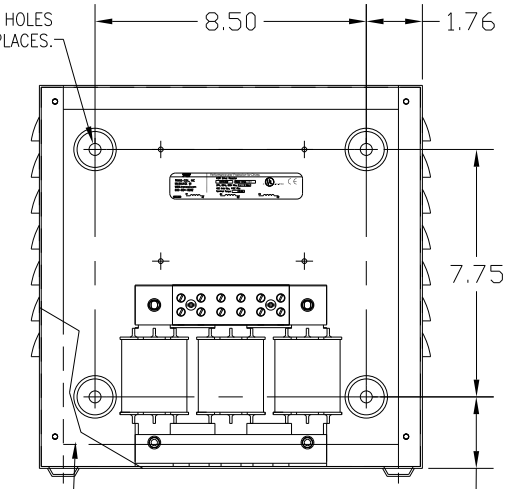

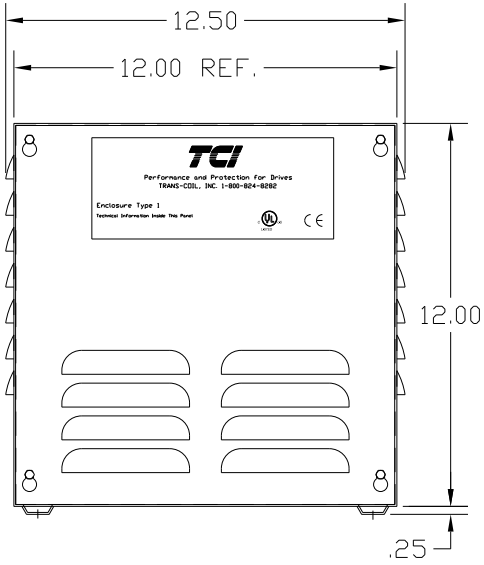

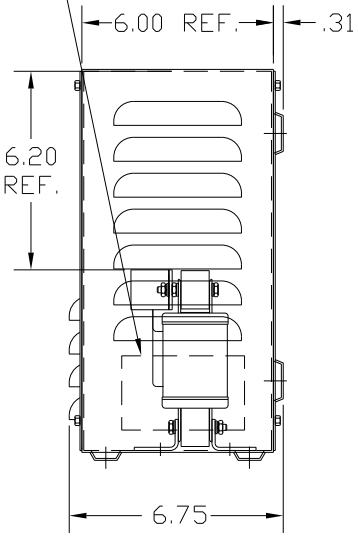

NOTE: A1, A2, B1, B2, C1, C2, TERMINAL BLOCK FOR REFERENCE ONLY.

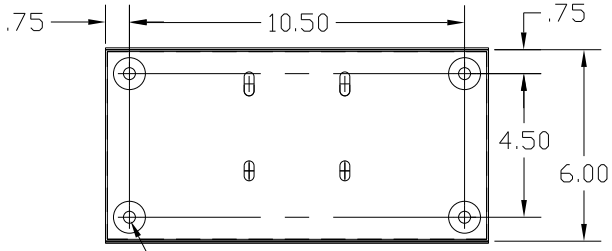

CUSTOMER IS RESPONSIBLE FOR INSTALLATION TO MEET ALL LOCAL AND NATIONAL CODES

NOTE 1: WATTS LOSS WILL VARY DUE TO FUNDAMENTAL FREQUENCY, CARRIER FREQUENCY AND OTHER SYSTEM CHARACTERISTICS.

KDR DRIVE REACTORS COMPLY WITH THE THERMAL AND ALTITUDE STANDARDS SET FORTH BY NEMA ST20-1992..

NEC MOTOR CURRENTS SHOWN IN THE 208/240 VOLT CHART ARE BASED ON HORSEPOWER AT 208 VOLT. 575/600 VOLT CHART USE THE 575 VOLT CURRENT RATING.

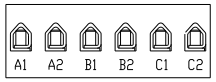

TERMINAL BLK MARKING

BLOCK WIRE RANGE FOR REACTOR AND TIGHTENING TORQUE.	#18-#4 AWG 20 LB-IN

VENDOR LILLY POWDER COATINGS, INC.
PRODUCT CODE 312E
COLOR PEBBLE GRAY
POWDER TYPE POLYESTER POLYURETHANE

PAINT SUITABLE FOR OUTDOOR APPLICATION PER UL TYPE 3R AND APPLIED PER A UL ACCEPTED DTW2 COATING PROGRAM.

NO	REVISION	DATE	BY

TOLERANCES (EXCEPT AS NOTED)
DECIMAL .XX ±.03 .XXX± .01
FRACTIONAL ± 1/32
ANGULAR ± 1/2°

TCI
7878 N. 86th STREET
MILWAUKEE, WI 53224

KDR OUTPUT REACTOR
480V, ENCLOSED, TYPE 1

DRN. BY DSW
DATE 6/21/04
DWG. NO. B KDRULD3PE01DG
SCALE
APRVD.
SHT. 1 OF1