CATALOG NO	VOLTAGE	NEC MOTOR HP	NEC MOTOR CURRENT	WATTS LOSS	APPROX WT-LBS	TORQUE (LB-IN)
KDRD4PC2	480	30	40	NOTE:1	18	20

NOTE 1: WATTS LOSS WILL VARY DUE TO FUNDAMENTAL FREQUENCY, CARRIER FREQUENCY AND OTHER SYSTEM CHARACTERISTICS.

KDR DRIVE REACTORS COMPLY WITH THE THERMAL AND ALTITUDE STANDARDS SET FORTH BY NEMA ST20-1992..

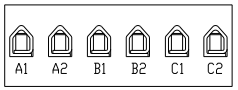

NOTE: A1, A2, B1, B2, C1, C2, MARKINGS ON TERMINAL BLOCK FOR REFERENCE ONLY.

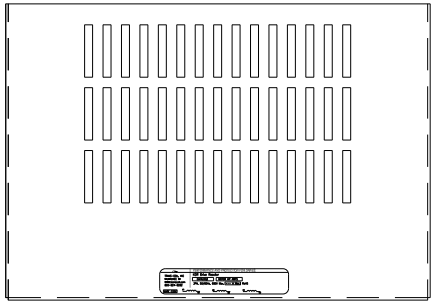

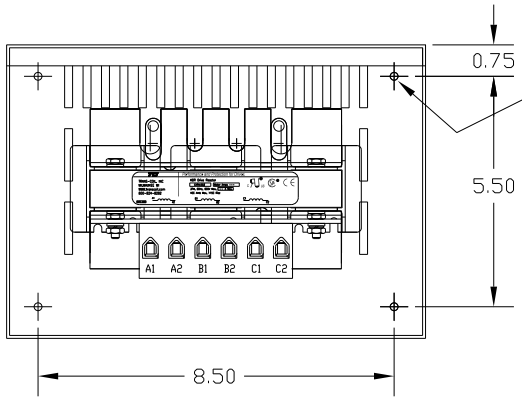

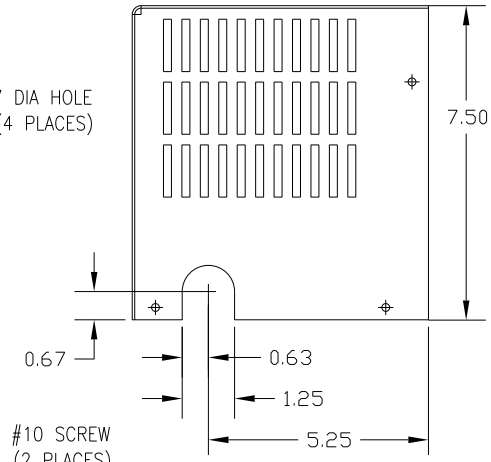

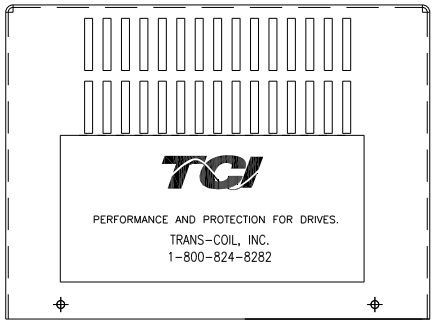

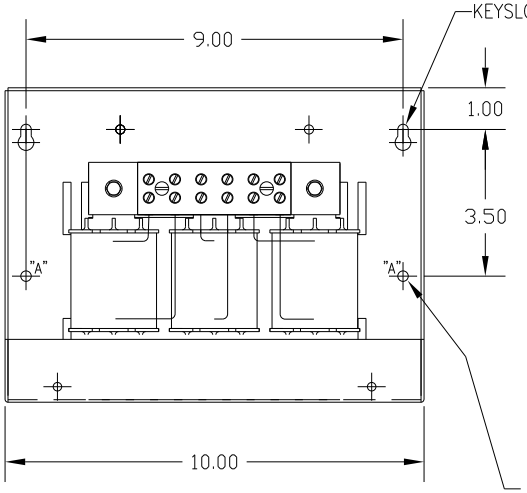

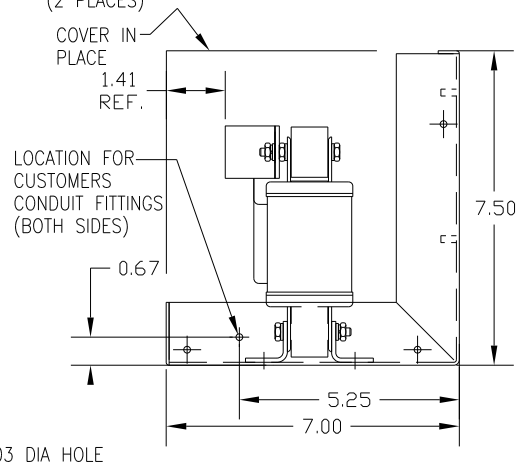

CUSTOMER IS RESPONSIBLE FOR INSTALLATION TO MEET ALL NATIONAL AND LOCAL ELECTRICAL CODES.

NO	REVISION	DATE	BY

TOLERANCES (EXCEPT AS NOTED)
DECIMAL
.XX ±.03
.XXX±.01
FRACTIONAL
± 1/32
ANGULAR
± 1/2°

TCI
7878 N. 86th STREET
MILWAUKEE, WI 53224

KDR OUTPUT REACTOR
480V, FRAME D

DRN. BY DSW
DATE 1/25/12
SCALE
APRV'D.
DWG. NO. B KDRD4PC2DG
SHT. 1 OF1