CATALOG NO	VOLTAGE	NEC MOTOR HP	NEC MOTOR CURRENT	WATTS LOSS	APPROX WT-LBS	TORQUE (LB-IN)
KDRD32PC2	575	20	22	NOTE:1	16	20

NOTE 1: WATTS LOSS WILL VARY DUE TO FUNDAMENTAL FREQUENCY, CARRIER FREQUENCY AND OTHER SYSTEM CHARACTERISTICS.

KDR DRIVE REACTORS COMPLY WITH THE THERMAL AND ALTITUDE STANDARDS SET FORTH BY NEMA ST20-1992..

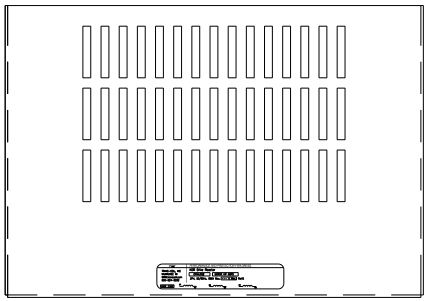

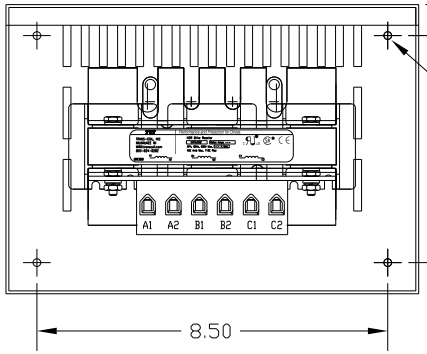

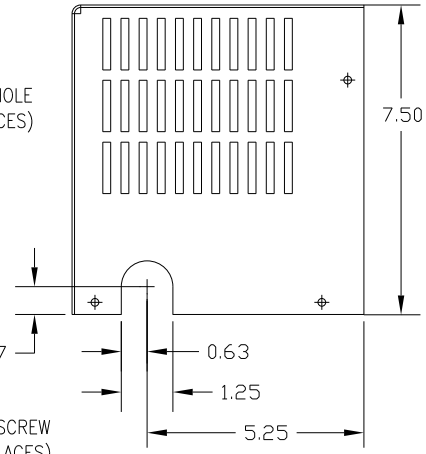

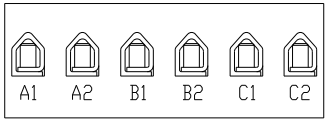

NOTE: A1, A2, B1, B2, C1, C2, MARKINGS ON TERMINAL BLOCK FOR REFERENCE ONLY.

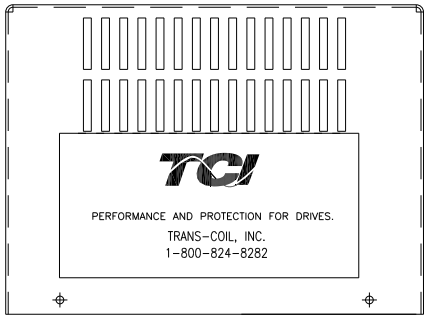

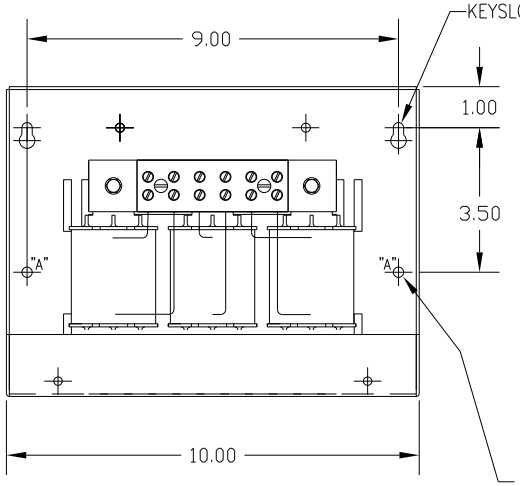

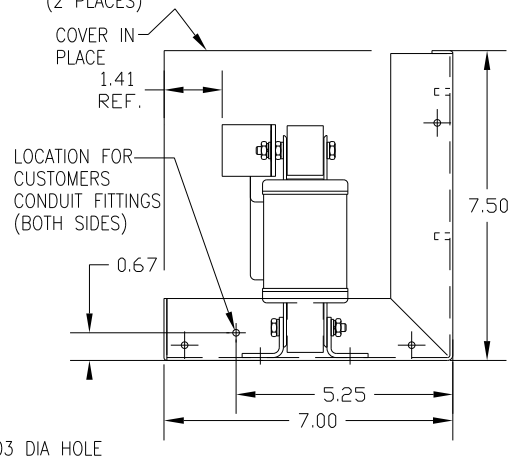

CUSTOMER IS RESPONSIBLE FOR INSTALLATION TO MEET ALL NATIONAL AND LOCAL ELECTRICAL CODES.

NO	REVISION	DATE	BY

TOLERANCES (EXCEPT AS NOTED)
DECIMAL .XX ±.03 .XXX± .01
FRACTIONAL ± 1/32
ANGULAR ± 1/2°

7878 N. 86th STREET
MILWAUKEE, WI 53224

KDR OUTPUT REACTOR
575V, FRAME D

DRN. BY DSW | DATE 1/25/12 | DWG. NO. B KDRD32PC2DG
SCALE | APRVD. | SHT. 1 OF1