CATALOG NO	VOLTAGE	NEC MOTOR HP	NEC MOTOR CURRENT	WATTS LOSS	APPROX. WEIGHT-LBS	TERMINAL BLOCK TORQUE: (LB-IN)
KDRD22HC2	208/240	15	46.2	108	18	20

NEC MOTOR CURRENTS SHOWN IN THE 208/240 VOLT CHART ARE BASED ON HORSE POWERS AT 208 VOLT. 575/600 VOLT CHART USE THE 575 VOLT CURRENT RATING.

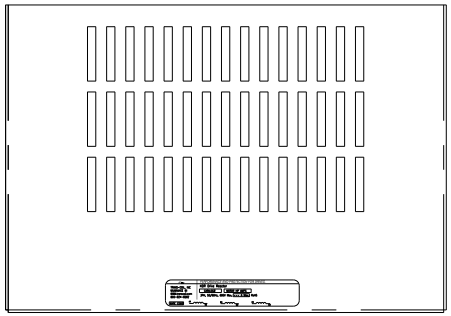

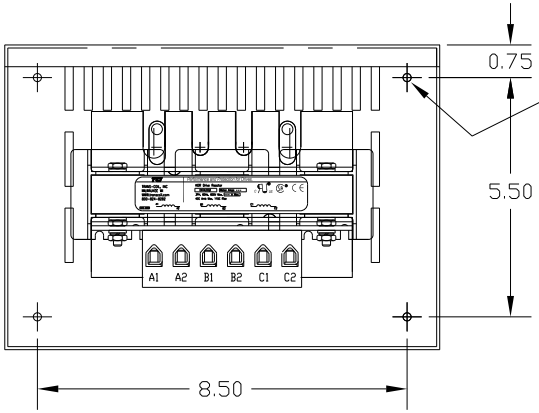

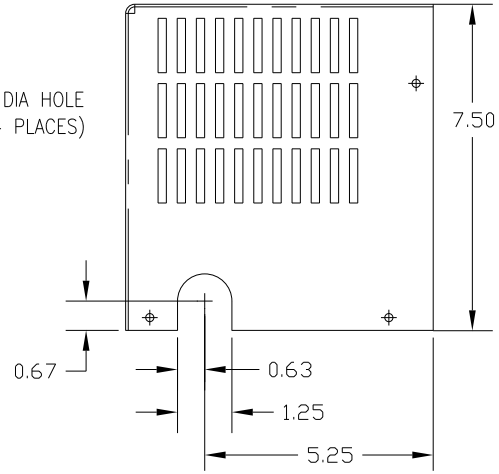

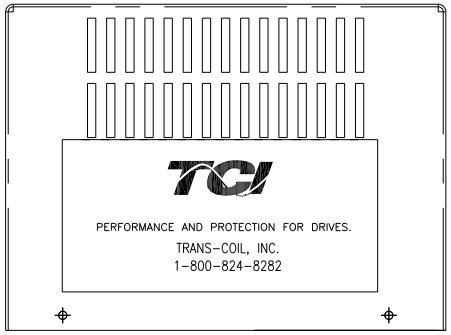

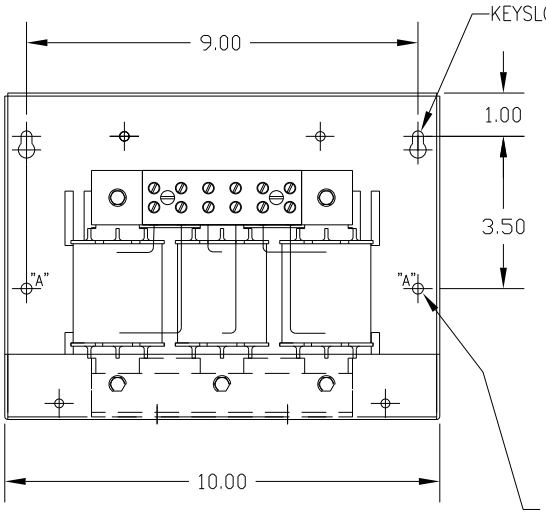

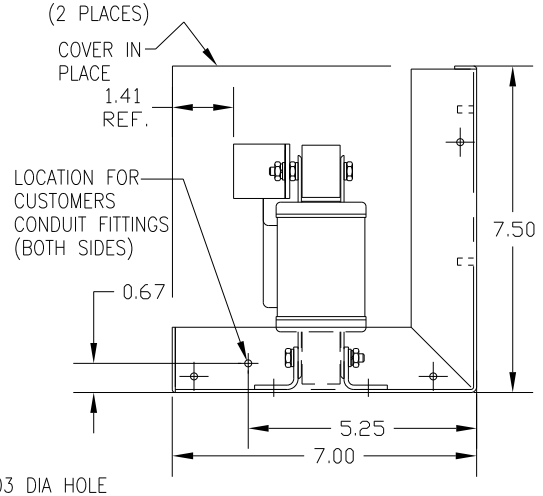

NOTE: A1, A2, B1, B2, C1, C2, MARKINGS ON TERMINAL BLOCK FOR REFERENCE ONLY.

CUSTOMER IS RESPONSIBLE FOR INSTALLATION TO MEET ALL NATIONAL AND LOCAL ELECTRICAL CODES.

NO	REVISION	DATE	BY

TOLERANCES (EXCEPT AS NOTED)
DECIMAL .XX ± .03 .XXX ± .01
FRACTIONAL ± 1/32
ANGULAR ± 1/2°

7878 N. 86th STREET
MILWAUKEE, WI 53224

KDR DRIVE REACTOR
240V HIGH Z, FRAME D

DRN. BY DSW | DATE 1/26/12 | DWG. NO. B KDRD22HC2DG
SCALE | APRVD. | SHT. 1 OF 1