CATALOG NO	VOLTAGE	NEC MOTOR HP	NEC MOTOR CURRENT	APPROX WT-LBS	TERMINAL HOLE SIZE
KDRC31PC2V	690	50	52	21	.31

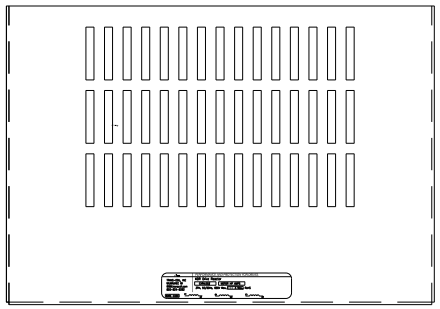

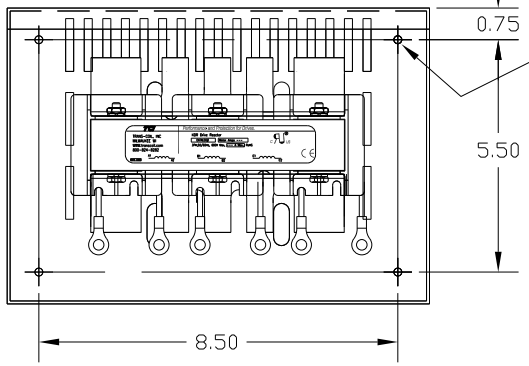

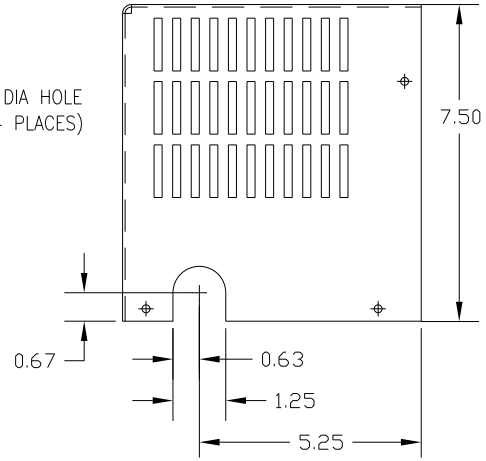

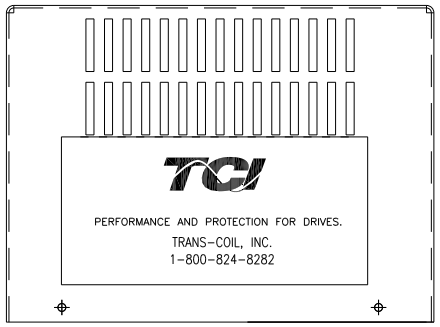

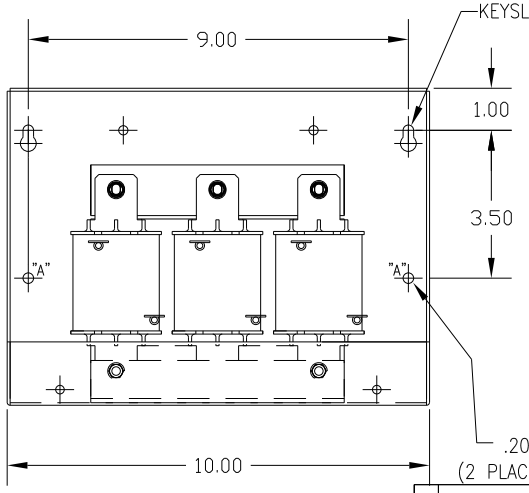

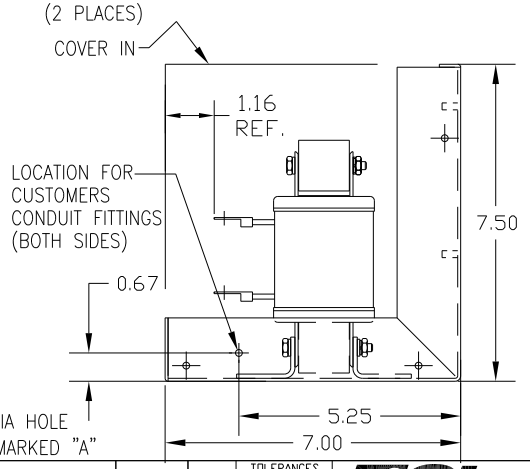

CUSTOMER IS RESPONSIBLE FOR INSTALLATION
TO MEET ALL NATIONAL AND LOCAL ELECTRICAL CODES.

NO	REVISION	DATE	BY

TOLERANCES (EXCEPT AS NOTED)
DECIMAL
.XX ±.03
.XXX±.01
FRACTIONAL
± 1/32
ANGULAR
± 1/2°

TCI
7878 N. 86th STREET
MILWAUKEE, WI 53224

OUTPUT REACTOR, ENCLOSED
690V,FRAME C

DRN. BY DSW
DATE 2/20/12
SCALE
APRVD.
DWG. NO. B KDRC31PC2VDG
SHT. 1 OF1