480 Rated Voltage, 600 Max Voltage, High Z, Impedance.								
Part Number	Horsepower (HP)	Motor Amps (A)	Maximum Amps (A)	Inductance (uH)	Weight (LBS)	Losses (W)	Available Lug Kit	Terminal Hole Size (Inches)
KDRX2HE01	800	960	965	32.5	615	1661	SLK16	0.53

480 Rated Voltage, 600 Max Voltage, Low Z, Impedance.								
Part Number	Horsepower (HP)	Motor Amps (A)	Maximum Amps (A)	Inductance (uH)	Weight (LBS)	Losses (W)	Available Lug Kit	Terminal Hole Size (Inches)
KDRX2LE01	800	960	965	19.5	590	997	SLK16	0.53

575 Rated Voltage, 600 Max Voltage, High Z, Impedance.								
Part Number	Horsepower (HP)	Motor Amps (A)	Maximum Amps (A)	Inductance (uH)	Weight (LBS)	Losses (W)	Available Lug Kit	Terminal Hole Size (Inches)
KDRX44HE01	800	768	864	49.8	620	1100	SLK16	0.53

575 Rated Voltage, 600 Max Voltage, Low Z, Impedance.								
Part Number	Horsepower (HP)	Motor Amps (A)	Maximum Amps (A)	Inductance (uH)	Weight (LBS)	Losses (W)	Available Lug Kit	Terminal Hole Size (Inches)
KDRX41LE01	900	864	900	26.6	590	1075	SLK16	0.53
KDRX42LE01	1000	960	1000	23.9	590	1194	SLK16	0.53

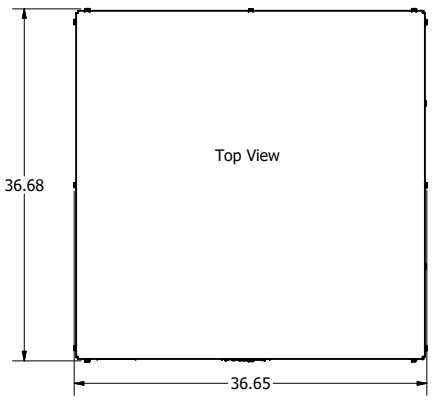

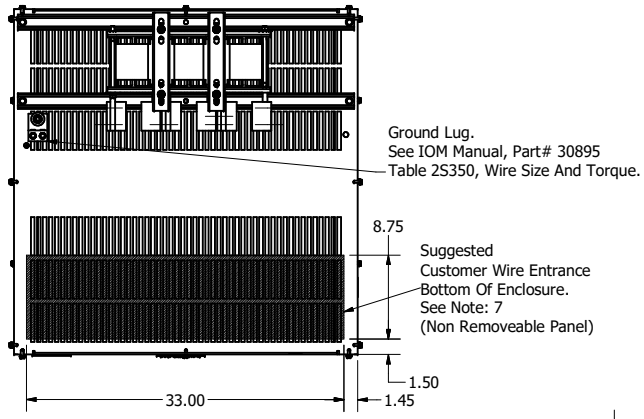

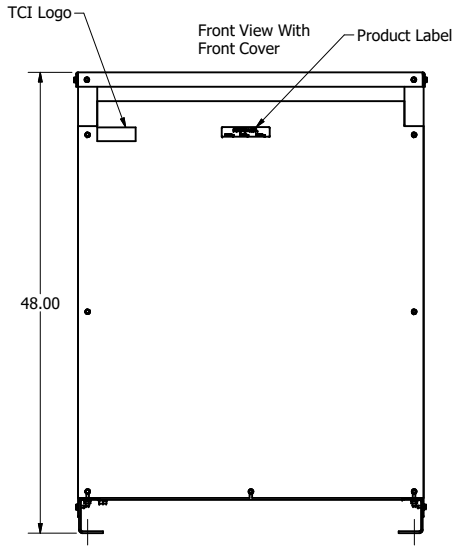

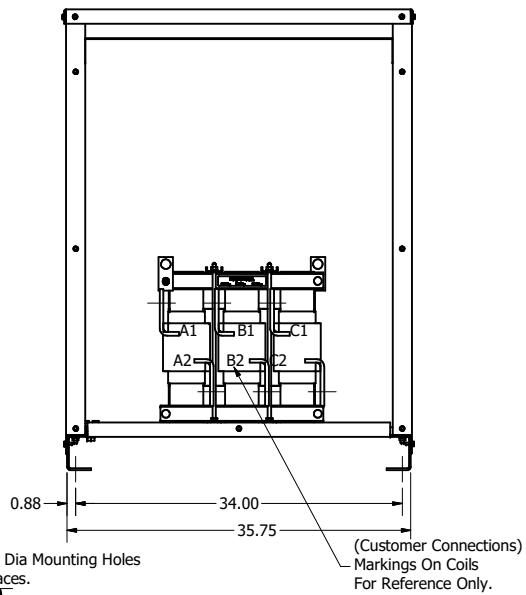

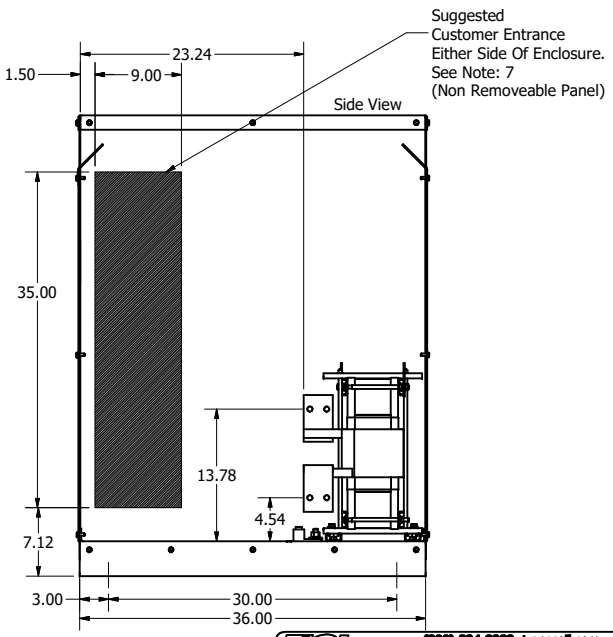

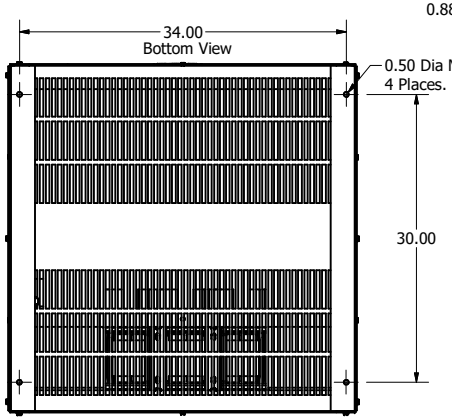

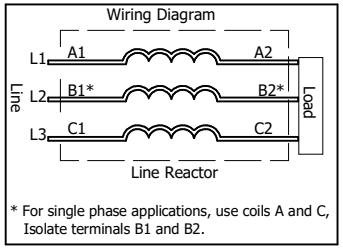

* For single phase applications, use coils A and C, Isolate terminals B1 and B2.

Notes:

1. KDR Lug Kits sold separately. Contact TCI.
2. For KDRUL Version With Terminal Lugs Attached, See Sheet 2
3. UL file number: cULus Listed File E116124.
4. KDR Drive Reactors Comply With The Thermal and Altitude Standards Set Forth by NEMA ST20-1992.
5. KDR IOM Manual Part Number 30895
6. Material(s) Shall be RoHS Compliant
7. Customer Is Responsible For Installation To Meet All National And Local Electrical Codes.

TCI, LLC CLAIMS PROPRIETARY RIGHTS IN THE MATERIAL HEREIN DISCLOSED. IT IS SUPPLIED WITHOUT PREDJUDICE TO ANY PATENT RIGHTS OF TCI AND MAY NOT BE REPRODUCED OR USED TO MANUFACTURE ANYTHING SHOWN THEREIN WITHOUT WRITTEN PERMISSION FROM TCI.

NO	REVISION	DATE	BY
A	X44H, Watts 1592 to 1100	8/12/19	DSW

TOLERANCES (EXCEPT AS NOTED)
DECIMAL .XX ± .25 .XXX ± .10
FRACTIONAL ± 1/16
ANGULAR ± 1°

TCI
W132 N10611 Grant Drive
Germantown, WI 53022

KDR X Frame, Copper Bus, Enclosed
Type 1, Reactor Drawing

DRN. BY DSW | DATE: 4/16/18 | 107616DG
SCALE: 1/10 | APRVD. | SIZE: C
SHT 1 OF 8