HGP Part Number	HorsePower (HP)	kVar	Harmonic	Voltage (V)	Hz.	Phase
HGP0350AW3----	350	105	5th	480	60	3

Note: For Torque Information
See IOM Manual

Customer Connections.
L1, L2, L3, T1, T2, T3
Wire Range: Two, 350MCM to 4AWG.

Ground Lug
Wire Range: Two, 350MCM to 4AWG.

HGP Part Number	Schematic Drawing #	Approx Weight (LBS)
HGP0350AW3S0000	28697-5S	655
HGP0350AW3C0000	28697-5	670
HGP0350AW3C000H	28697-5H	675
HGP0350AW3S1000	29597-PQ1	658
HGP0350AW3C1000	29597-PQ	673
HGP0350AW3C100H	29597-PQH	678

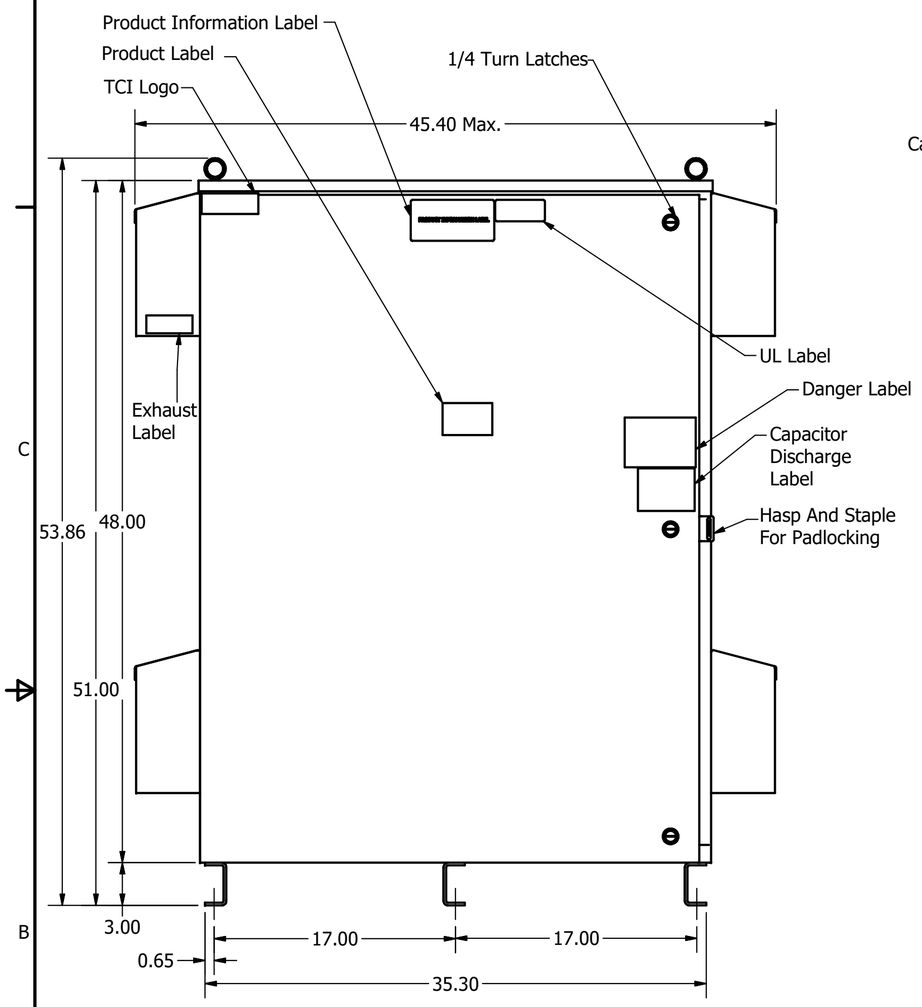

Front View
With Door

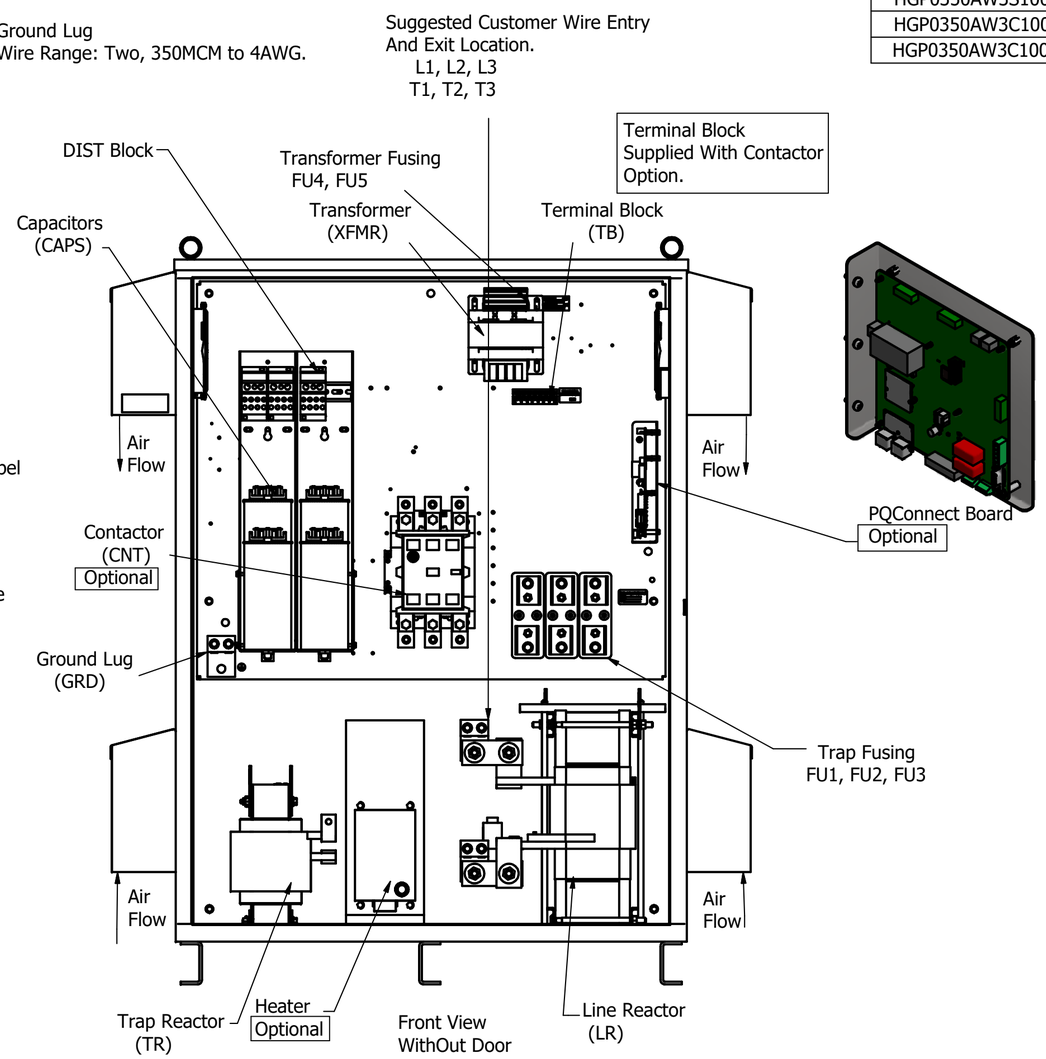

Front View
WithOut Door

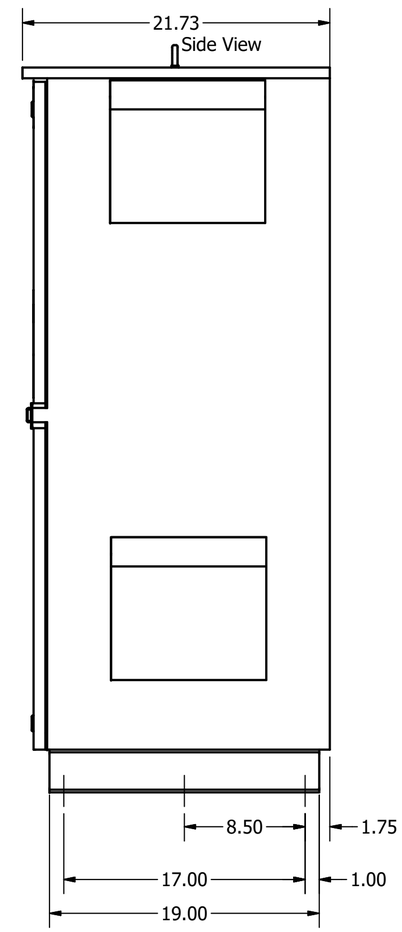

Side View

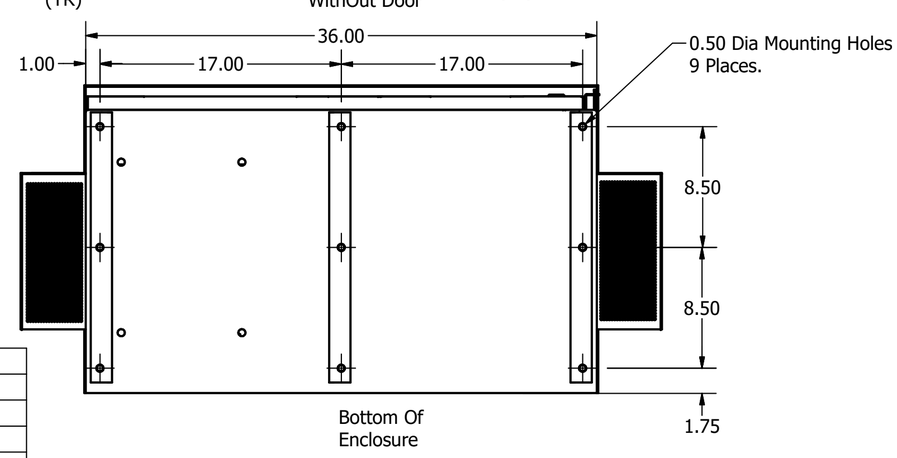

Bottom Of
Enclosure

HGP0350AW3-----						
Components	S0000	C0000	C000H	S1000	C1000	C100H
Line Reactor (LR)	x	x	x	X	X	X
Trap Reactor (TR)	x	x	x	X	X	X
Capacitor (Cap)	x	x	x	X	X	X
Trap Fusing, FU1, FU2, FU3	x	x	x	X	X	X
Contactor (CNT)		x	x		X	X
Transformer (XFMR)	x	x	x	X	X	X
XFMR Fusing, FU4, FU5	x	x	x	X	X	X
Heater			x			X
PQConnect Board				X	X	X

Customer Is Responsible For Installation to
Meet All National And Local Electrical Codes.

NOTE: USE ONLY HUBS OR FITTINGS THAT COMPLY
WITH UL514B FOR TYPE 3R ENCLOSURES

Material(s) Shall be RoHS Compliant

TCI, LLC CLAIMS PROPRIETARY RIGHTS IN THE MATERIAL HEREIN DISCLOSED. IT IS SUPPLIED WITHOUT PREDJUDICE TO ANY PATENT RIGHTS OF TCI AND MAY NOT BE REPRODUCED OR USED TO MANUFACTURE ANYTHING SHOWN THEREIN WITHOUT WRITTEN PERMISSION FROM TCI.

NO	REVISION	DATE	BY
F	Add PQConnect	6/11/18	DSW

TOLERANCES (EXCEPT AS NOTED)
DECIMAL .XX ± .25 .XXX ± .10
FRACTIONAL ± 1/16
ANGULAR ± 1°

TCI
W132 N10611 Grant Drive
Germantown, WI 53022

HarmonicGuard Passive
HGP, 350HP, 480/3/60, Type 3R

DRN. BY DSW | DATE: 4/24/14 | 105567DG
SCALE: 1/8 | APRVD: | SIZE C | SHT.1 OF 1