SEE DWG# 26972 FOR SCHEMATIC

CUSTOMER IS RESPONSIBLE FOR INSTALLATION
TO MEET ALL NATIONAL AND LOCAL ELECTRICAL CODES.

NOTE: USE ONLY HUBS OR FITTINGS THAT COMPLY
WITH UL514B FOR TYPE 3R ENCLOSURES.

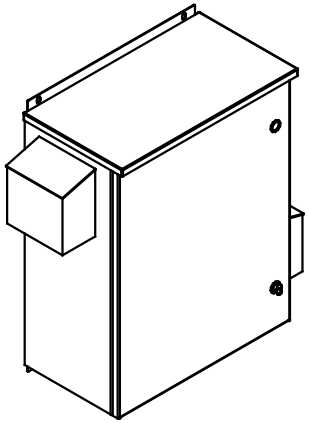

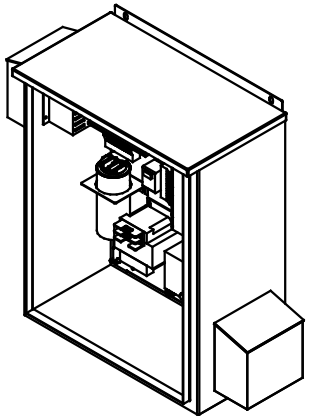

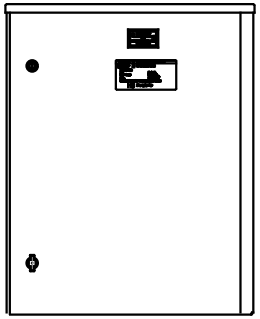

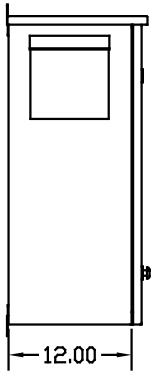

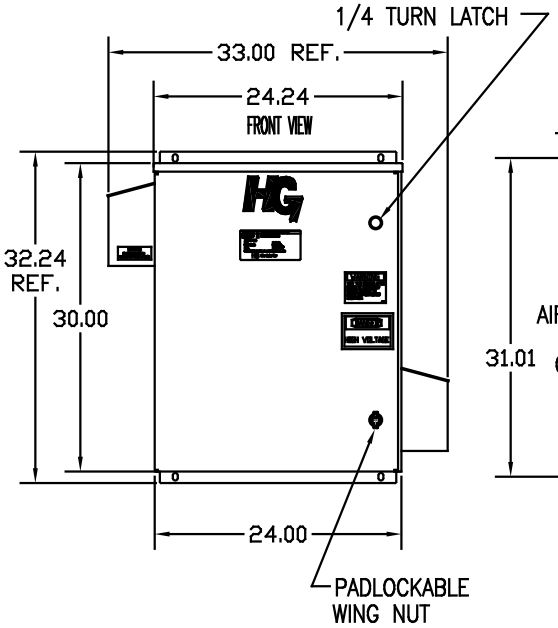

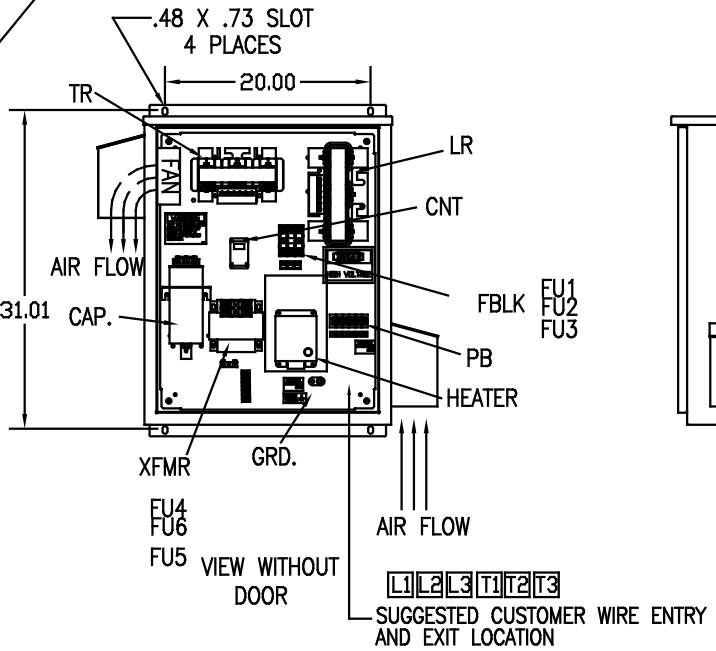

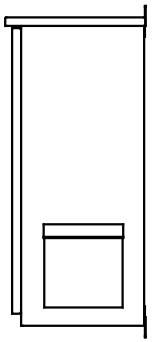

UNIT SPECIFICATIONS:					
KVAR	HARMONIC	VOLT	HZ	PHASE	HP
10	5TH	600	60	3	30
ENCLOSURE	UL TYPE 3R				
COLOR	WHITE				
FEATURES	CONTACTOR, HEATER				
APPROX.WT. LBS.	160				

SYMBOL	TCI PART NUMBER
LR	KDRH41T
TR	KTR10C65HG
CAP. (10 KVAR) 1 PLACE.	KCAP10C6A
XFMR.	24381
Fu1, 2, 3	11263
Fu4,6	23405
Fu5	17567
CNT	26739
HEATER (200 WATT)	11638

PB-POWER INPUT BLOCK:
WIRE RANGE-#18 TO #4 AWG.
TIGHTENING TORQUE 20 IN-LB.

GROUND LUG:
WIRE RANGE-1/0 TO #14 AWG.
TIGHTENING TORQUE 200 IN-LB.

NO	REVISION	DATE	BY

TOLERANCES (EXCEPT AS NOTED)
DECIMAL .XX ±.12 .XXX±.06
FRACTIONAL ±1/32
ANGULAR ±1/2°

TCI 7878 N. 86th STREET MILWAUKEE, WI 53224

HG30CW03STCH, 30HP
600/3/60 UL TYPE 3R

DRN. BY DSW | DATE 2/17/09 | DWG. NO. C 103745DG
SCALE TO FIT | APRVD. | SHT. 1 OF 1