| UNIT SPECIFICATIONS: | | | | | |
|---|---|---|---|---|---|
| KVAR | HARMONIC | VOLT | HZ | PHASE | HP |
| 10 | 5TH | 480 | 60 | 3 | 30 |
| ENCLOSURE | | UL TYPE 3R | | | |
| COLOR | | WHITE | | | |
| APPROX.WT. LBS. | | 130 | | | |

| SYMBOL | TCI PART NUMBER |
|---|---|
| LR | KDRH1T |
| TR | KTR10A65HG |
| CAP (10 KVAR) | 27607 |
| XFMR. | 23896 |
| Fu1, 2, 3 | 11307 |
| Fu4,6 | 24009 |
| Fu5 | 17567 |

| ALTERNATE | TCI PART NUMBER |
|---|---|
| CAP (10 KVAR) | KCAP10A6B |

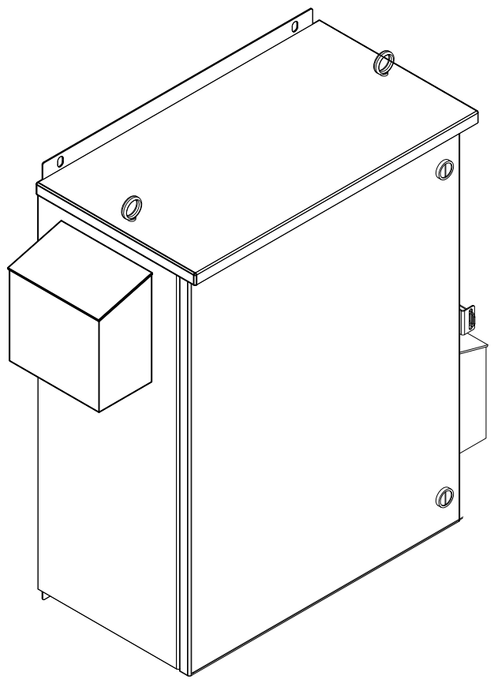

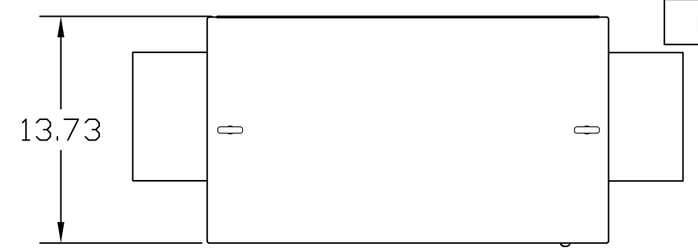


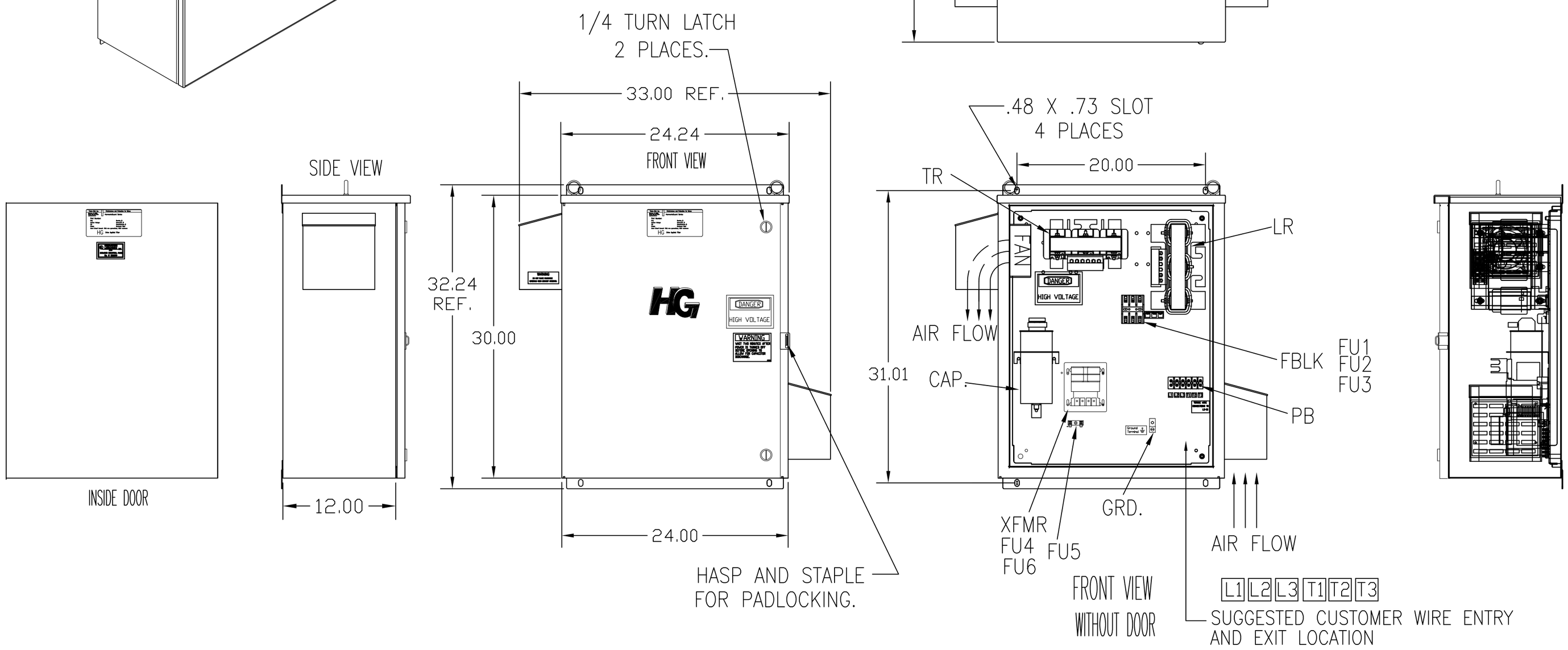


SEE DWG# 26756 FOR SCHEMATIC

NOTE: USE ONLY HUBS OR FITTINGS THAT COMPLY WITH UL514B FOR TYPE 3R ENCLOSURES.

CUSTOMER IS RESPONSIBLE FOR INSTALLATION TO MEET ALL NATIONAL AND LOCAL ELECTRICAL CODES.

PB–POWER INPUT BLOCK:
WIRE RANGE–#18 TO #4 AWG.
TIGHTENING TORQUE 20 IN–LB.

GROUND LUG:
WIRE RANGE–1/0 TO #14 AWG.

| | |
|---|---|
| 1/0 AWG thru 2 AWG | 50 IN–LBS. MAX. |
| 4 AWG thru 6 AWG | 45 IN–LBS. MAX. |
| 8 AWG | 40 IN–LBS MAX. |
| 10 AWG thru 14 WG | 35 IN–LBS. MAX. |

TCI, LLC CLAIMS PROPRIETARY RIGHTS IN THE MATERIAL HEREIN DISCLOSED. IT IS SUPPLIED WITHOUT PREDJUDICE TO ANY PATENT RIGHTS OF TCI AND MAY NOT BE REPRODUCED OR USED TO MANUFACTURE ANYTHING SHOWN THEREIN WITHOUT WRITTEN PERMISSION FROM TCI.

| NO | REVISION | DATE | BY |
|---|---|---|---|
| C | 2900 CHG TO ASC CAPS | 3/1/13 | DSW |
| B | 2707 CHG GRD. LVG | 6/15/11 | DSW |
| A | 2641 ADD EYEBOLTS | 10/13/09 | DSW |

TOLERANCES (EXCEPT AS NOTED)
DECIMAL .XX ±.12 .XXX±.06
FRACTIONAL ± 1/32
ANGULAR ± 1/2°

TCI® W132 N10611 Grant Drive
Germantown, WI 53022

HG30AW03ST, 30HP
480/3/60 UL TYPE 3R

DRN. BY DSW | DATE 8/26/08 | DWG. NO. 103615DG
SCALE TO FIT | SIZE C | SHT. 1 OF 1