SEE DWG# 26972-1 FOR SCHEMATIC

CUSTOMER IS RESPONSIBLE FOR INSTALLATION
TO MEET ALL NATIONAL AND LOCAL ELECTRICAL CODES.

NOTE: USE ONLY HUBS OR FITTINGS THAT COMPLY
WITH UL514B FOR TYPE 3R ENCLOSURES.

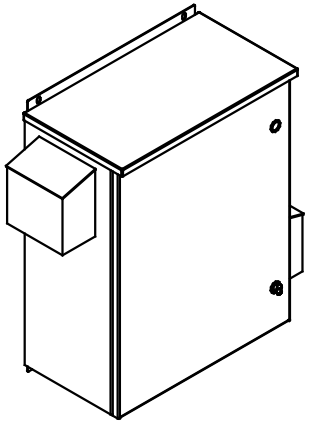

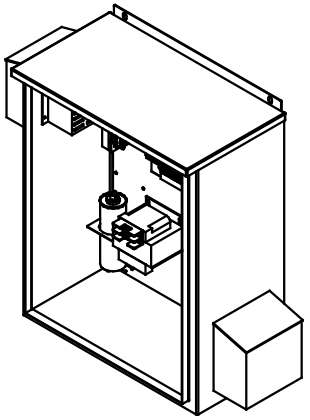

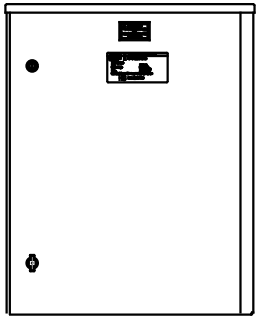

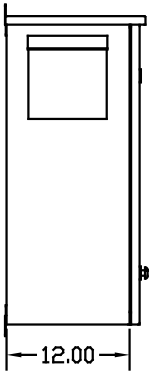

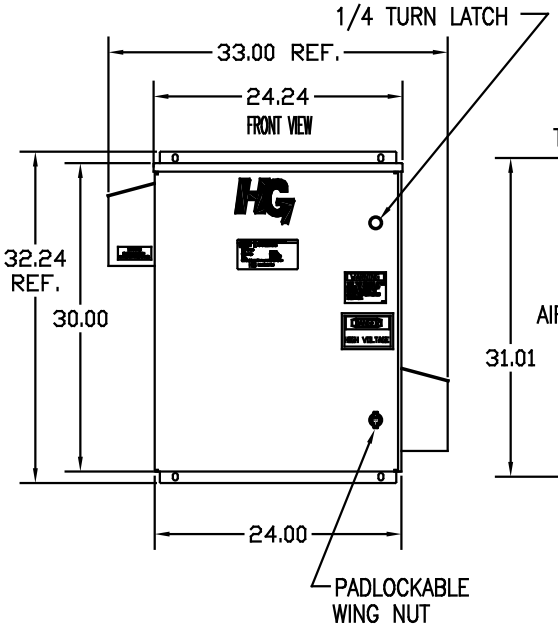

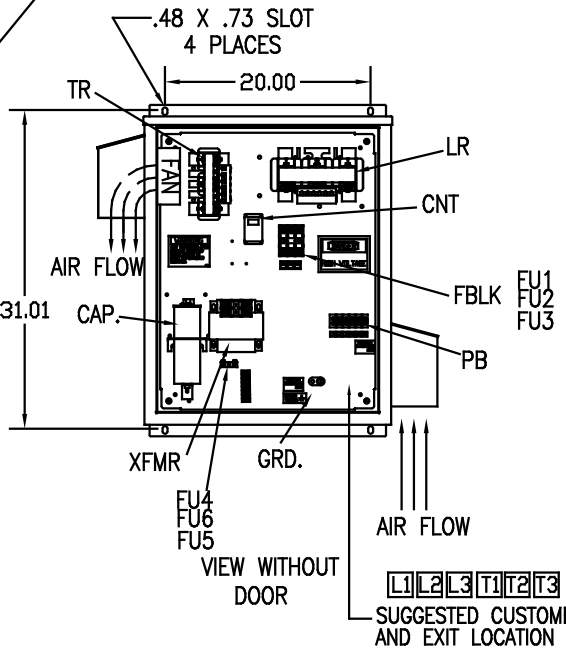

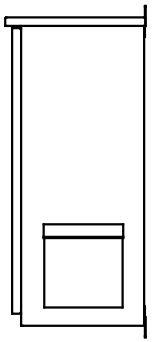

UNIT SPECIFICATIONS:					
KVAR	HARMONIC	VOLT	HZ	PHASE	HP
5	5TH	600	60	3	15
ENCLOSURE	UL TYPE 3R				
COLOR	WHITE				
FEATURES	CONTACTOR				
APPROX.WT. LBS.	136				

SYMBOL	TCI PART NUMBER
LR	KDRF41T
TR	KTR5C65HG
CAP. (5 KVAR), 1 PLACE.	KCAP5C6A
XFMR.	24381
Fu1, 2, 3	11263
Fu4,6	23405
Fu5	17567
CNT	26739

PB-POWER INPUT BLOCK:
WIRE RANGE-#18 TO #4 AWG.
TIGHTENING TORQUE 20 IN-LB.

GROUND LUG:
WIRE RANGE-1/0 TO #14 AWG.
TIGHTENING TORQUE 200 IN-LB.

NO	REVISION	DATE	BY

TOLERANCES (EXCEPT AS NOTED)
DECIMAL .XX ±.12 .XXX±.06
FRACTIONAL ±1/32
ANGULAR ±1/2°

TCI 7878 N. 86th STREET MILWAUKEE, WI 53224

HG15CW03STC, 15HP
600/3/60 UL TYPE 3R

DRN. BY DSW | DATE 2/24/09 | DWG. NO. C 103689DG
SCALE TO FIT | APRVD. | SHT. 1 OF 1