SEE DWG# 26899 FOR SCHEMATIC

CUSTOMER IS RESPONSIBLE FOR INSTALLATION
TO MEET ALL NATIONAL AND LOCAL ELECTRICAL CODES.

NOTE: USE ONLY HUBS OR FITTINGS THAT COMPLY
WITH UL514B FOR TYPE 3R ENCLOSURES.

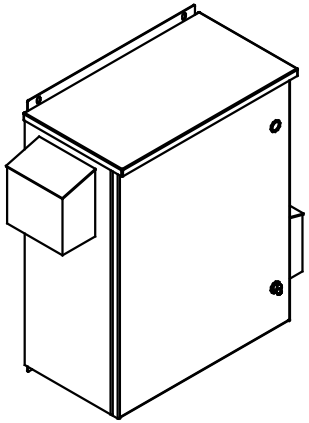

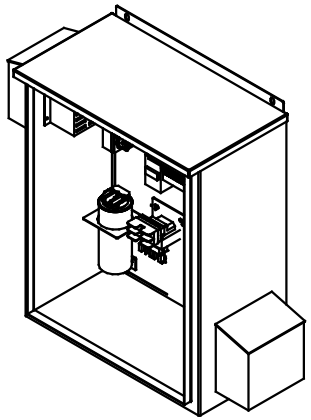

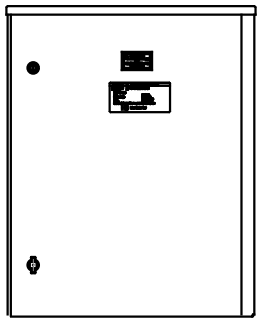

INSIDE VIEW
OF DOOR

SIDE VIEW

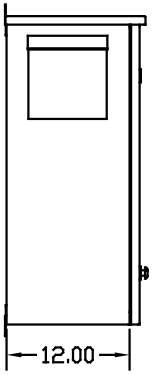

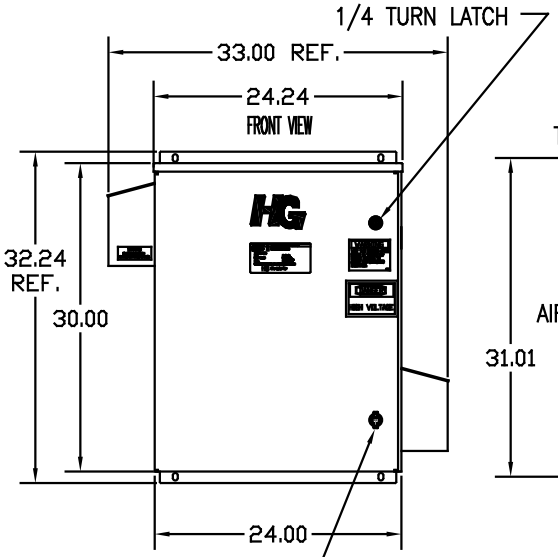

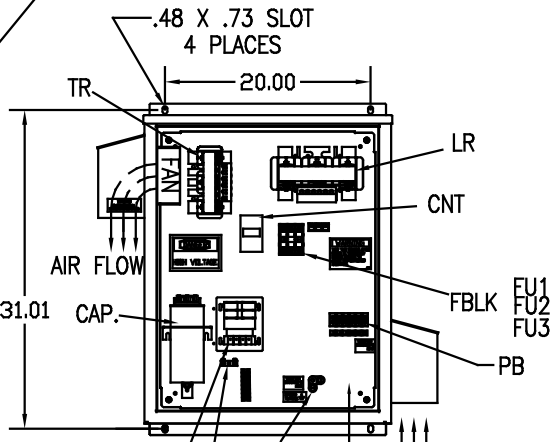

L1 L2 L3 T1 T2 T3

SUGGESTED CUSTOMER WIRE ENTRY
AND EXIT LOCATION

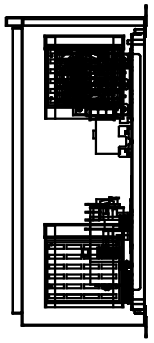

UNIT SPECIFICATIONS:					
KVAR	HARMONIC	VOLT	HZ	PHASE	HP
5	5TH	240	60	3	15
ENCLOSURE	UL TYPE 3R				
COLOR	WHITE				
FEATURES	CONTACTOR				
APPROX.WT. LBS.	138				

SYMBOL	TCI PART NUMBER
LR	KDRF21T
TR	KTR5B65HG
CAP. (3 KVAR)	KCAP5B6B
XFMR.	23896
Fu1, 2, 3	22665
Fu4,6	14106
Fu5	17567
CNT	26550

PB–POWER INPUT BLOCK:
WIRE RANGE–#18 TO #4 AWG.
TIGHTENING TORQUE 20 IN–LB.

GROUND LUG:
WIRE RANGE–1/0 TO #14 AWG.
TIGHTENING TORQUE 200 IN–LB.

NO	REVISION	DATE	BY

TOLERANCES (EXCEPT AS NOTED)
DECIMAL .XX ±.12 .XXX±.06
FRACTIONAL ±1/32
ANGULAR ±1/2°

TCI 7878 N. 86th STREET MILWAUKEE, WI 53224

HG15BW03STC, 15HP
240/3/60 UL TYPE 3R

DRN. BY DSW | DATE 12/22/08 | DWG. NO. C 103711DG
SCALE TO FIT | APRVD. | SHT. 1 OF 1