CUSTOMER IS RESPONSIBLE FOR INSTALLATION
TO MEET ALL NATIONAL AND LOCAL ELECTRICAL CODES.

NOTE: USE ONLY HUBS OR FITTINGS THAT COMPLY
WITH UL514B FOR TYPE 3R ENCLOSURES.

SEE DWG# 26753 FOR SCHEMATIC

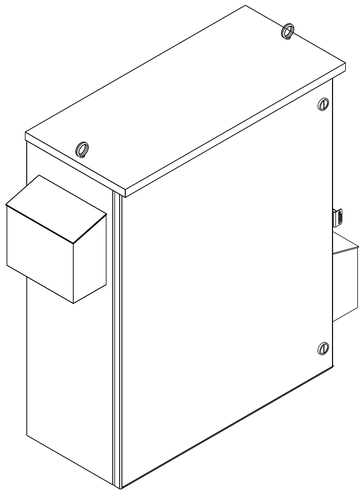

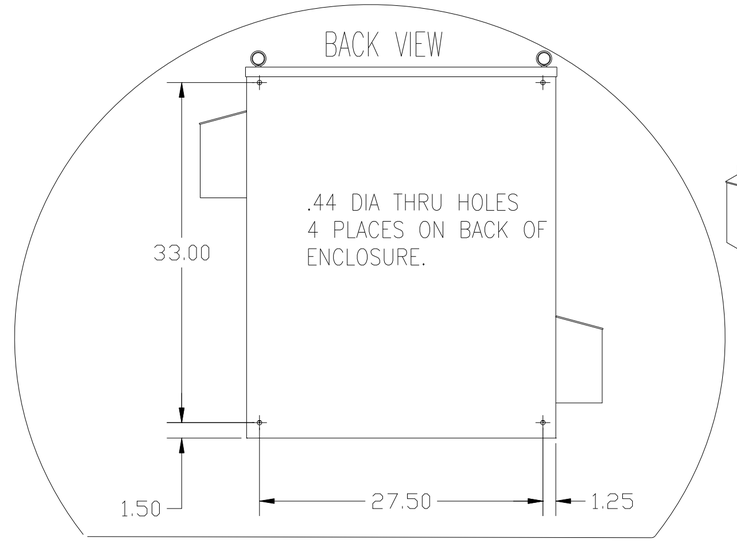

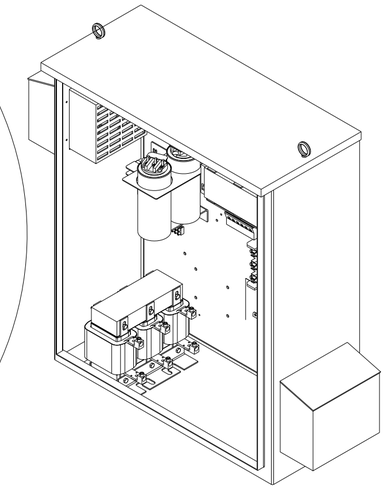

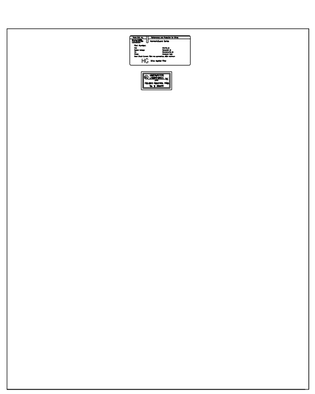

INSIDE DOOR

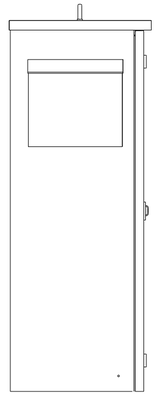

SIDE VIEW

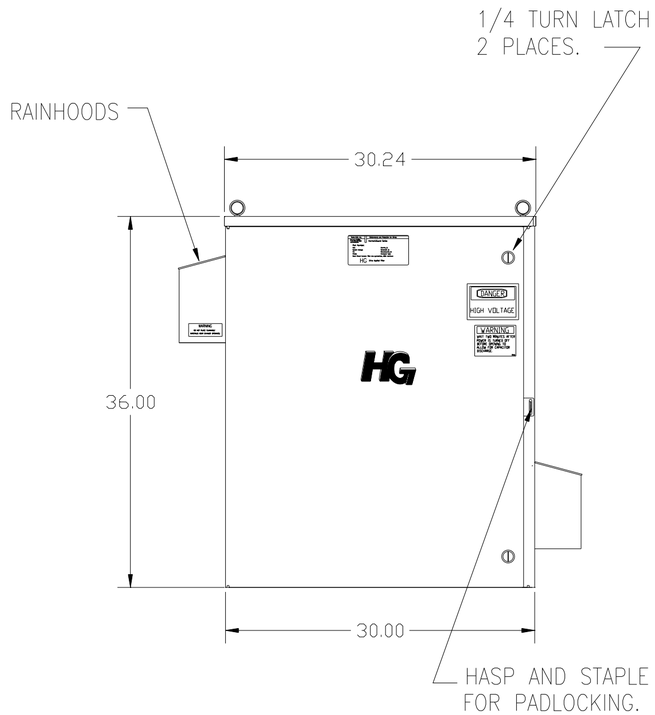

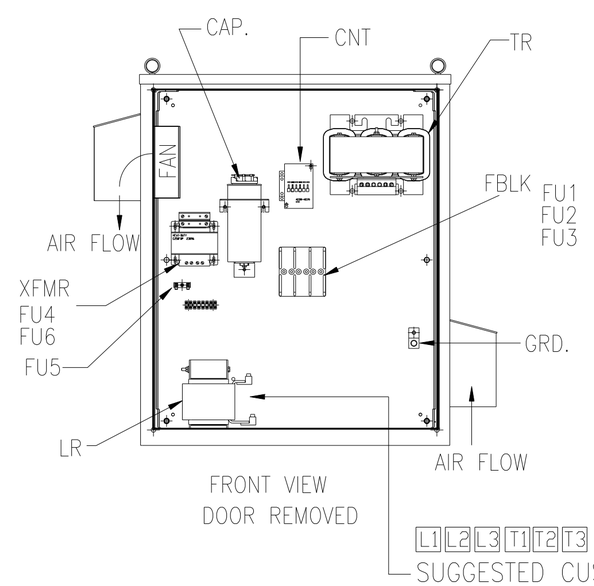

FRONT VIEW
DOOR REMOVED

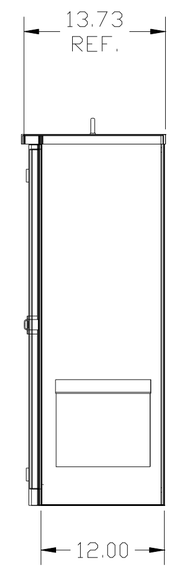

SIDE VIEW

UNIT SPECIFICATIONS:					
KVAR	HARMONIC	VOLT	HZ	PHASE	HP
30	5TH	480	60	3	100
ENCLOSURE	UL TYPE 3R				
COLOR	WHITE				
APPROX.WT. LBS.	271				

SYMBOL	TCI PART NUMBER
LR	KDRJ1T
TR	KTR30A65HG
CAP (15 KVAR)	27608
XFMR.	23896
Fu1, 2, 3	19061
Fu4,6	24009
Fu5	17567
CNT	22980

ALTERNATE	TCI PART NUMBER
CAP (15 KVAR)	KCAP15A6B

GROUND LUG:
WIRE RANGE: 2/0 TO #6 AWG.
TIGHTENING TORQUE 120 IN-LB.

CUSTOMER CONNECTION:
WIRE RANGE: 2/0 TO #6 AWG.
TIGHTENING TORQUE 120 IN-LB.

NO	REVISION	DATE	BY
C	2900 CHG TO ASC CAPS	3/14/13	DSW
B	2865 FUSE/BLOCK CHANGE	8/14/12	DSW
A	2641 ADD EYEBOLTS	10/15/09	DSW

TOLERANCES (EXCEPT AS NOTED)
DECIMAL .XX ±.12 .XXX± .06
FRACTIONAL ± 1/32
ANGULAR ± 1/2°

TCI 7878 N. 86th STREET MILWAUKEE, WI 53224

HG100AW03STC, 100HP
480/3/60 UL TYPE 3R

DRN. BY DSW | DATE 8/21/08 | DWG. NO. C 103675DG
SCALE TO FIT | APRV'D. | SHT. 1 OF 1