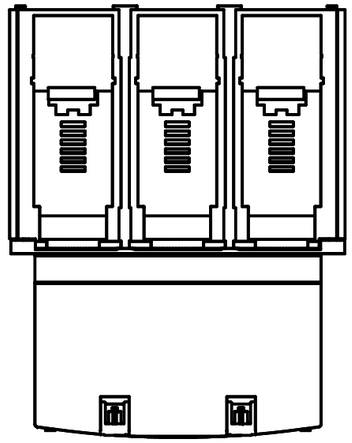

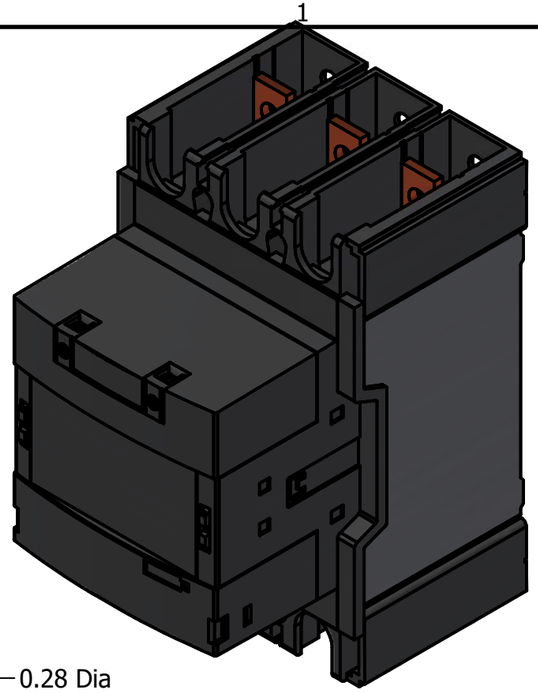

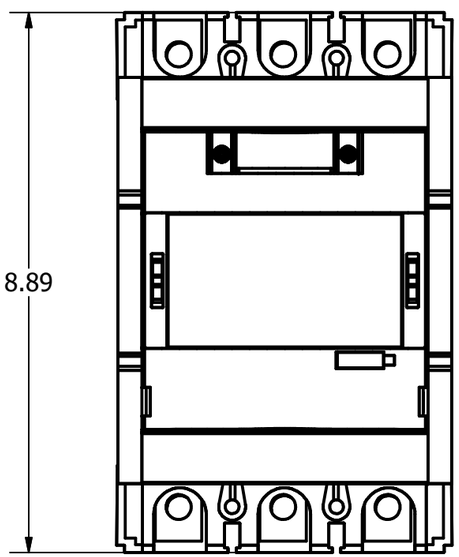

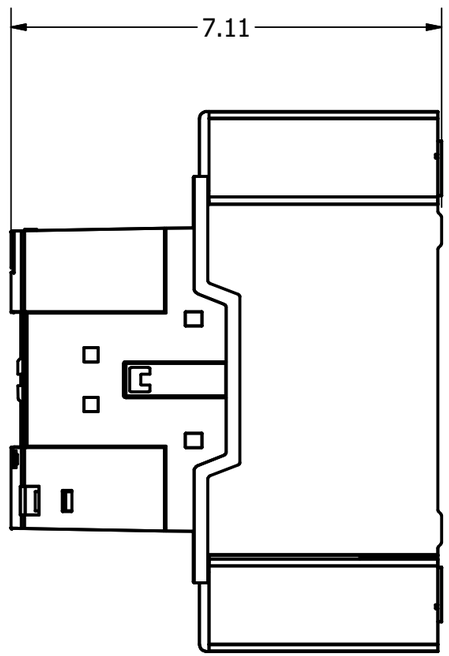

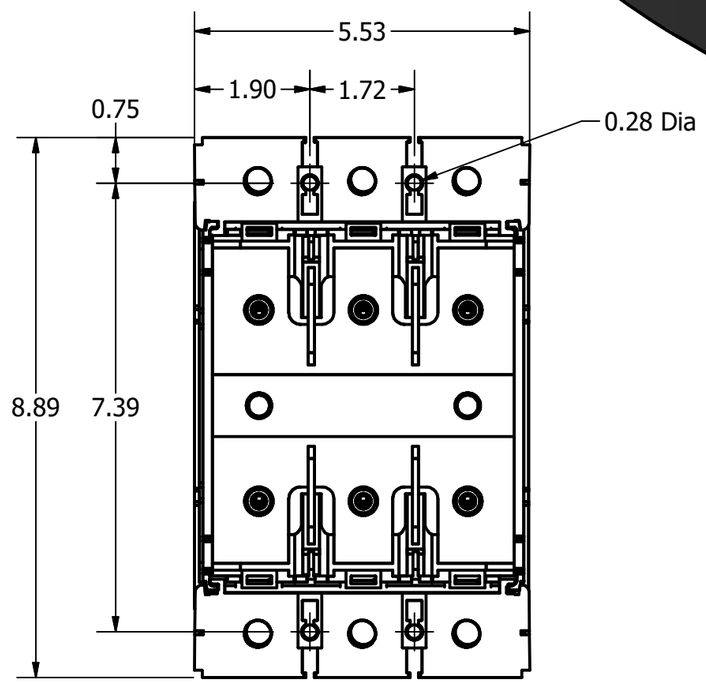

THE INFORMATION AND DESIGNS CONTAINED IN THIS DRAWING ARE CONFIDENTIAL AND THE PROPRIETARY PROPERTY OF ALLIED MOTION TECHNOLOGIES INC. AND ITS SUBSIDIARIES. NEITHER THIS DESIGN NOR ANY INFORMATION CONTAINED IN THIS DRAWING MAY BE REPRODUCED OR DISCLOSED TO OTHERS WITHOUT THE EXPRESS WRITTEN CONSENT OF ALLIED MOTION TECHNOLOGIES INC. AND ITS SUBSIDIARIES.

NO	REVISION	DATE	BY

TOLERANCES (EXCEPT AS NOTED)
DECIMAL
.XX ± .03
.XXX ± .010
FRACTIONAL
± 1/32
ANGULAR
± 1°

TCI An Allied Motion Company

W132N10611 Grant Drive
Germantown, WI 53022

© 2024 TCI, LLC

CNT, ABB, AF370-30-11-13, 520amp
100kA/800, (M5 Hardware)

DRN. BY	DATE	
DSW	1/10/24	32279
SCALE: 1:2.5	APRVD:	SIZE B

SHT.1 OF 1