Single Unit Standard Line Side CT Placement & Wiring, Generation 2 30A & 50A

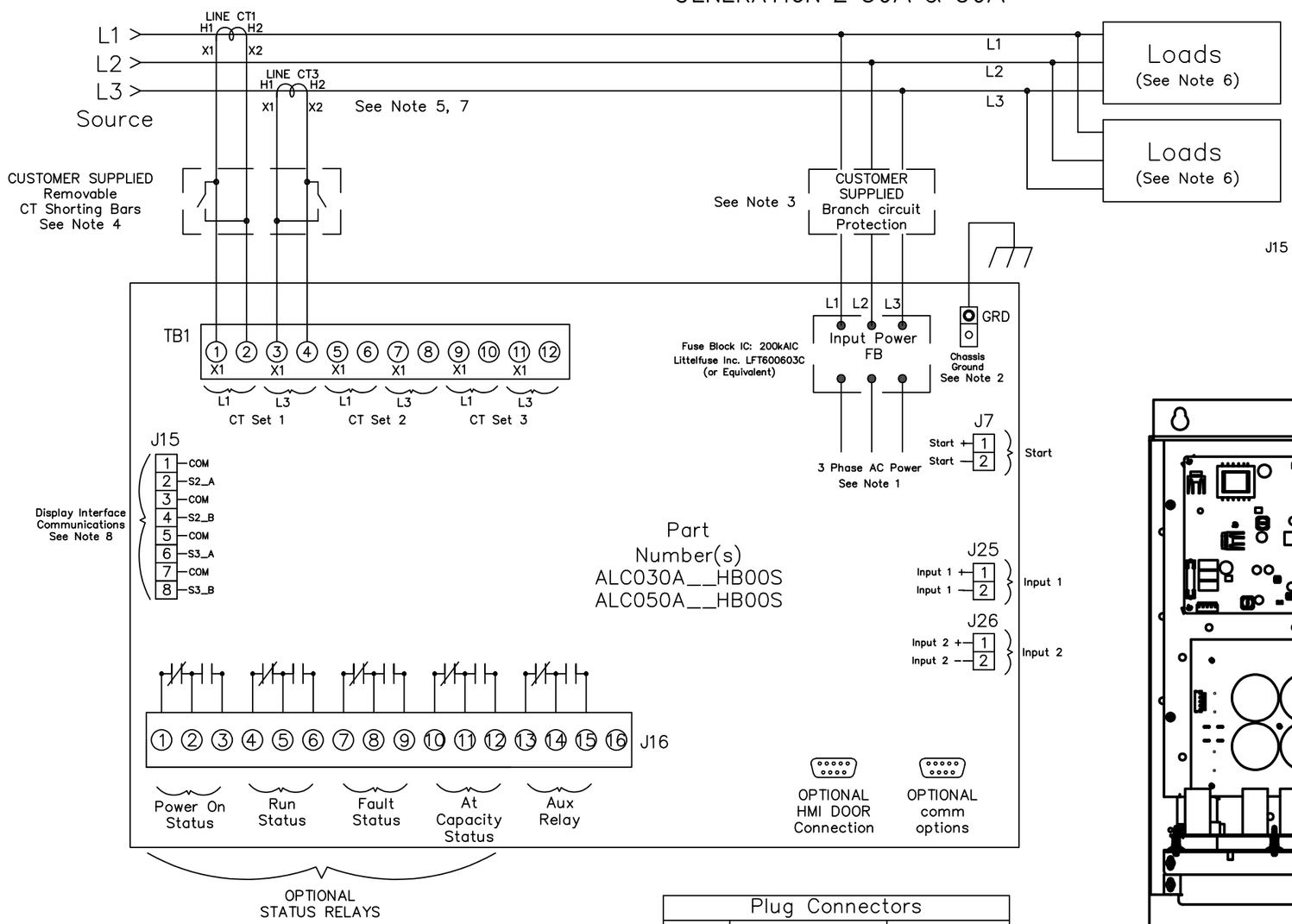

Terminal Wire Size & Tightening Torque				
Filter Size	Input	Wire Size	Torque In-Lbs (Nm)	Wire Type
30A to 50A	Fuse Block	2 – 4 Awg	50 (5.7)	CU/AL
		6 – 14 Awg	25 (2.8)	CU/AL
	Control Terminal	28 – 14 Awg	4.4 (0.5)	CU/AL
	GND Connection	2/0 – 2 Awg	50 (5.7)	CU/AL
		4 – 6 Awg	45 (5.1)	CU/AL
		8 Awg	40 (4.5)	CU/AL
		10 – 14 Awg	35 (4.0)	CU/AL

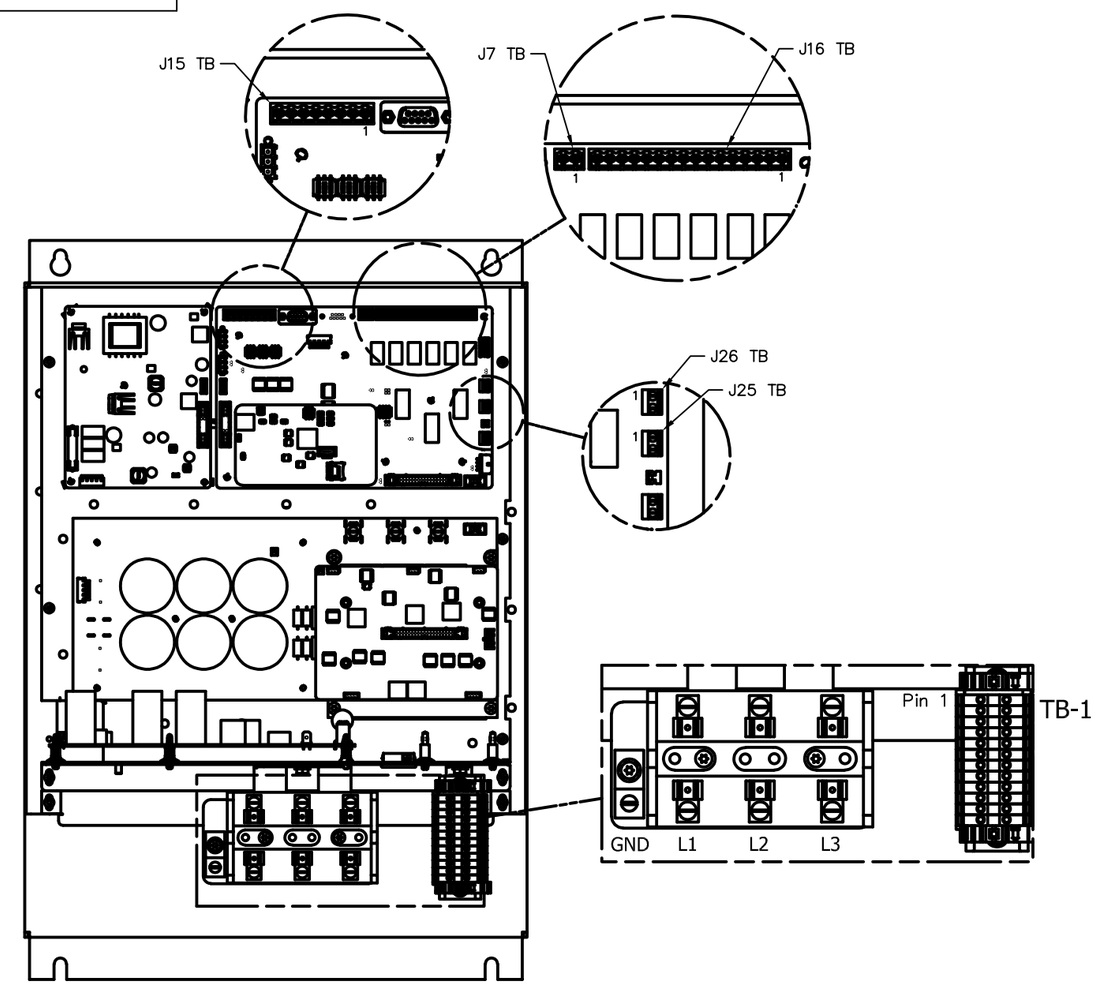

Plug Connectors		
Des.	Manufacturer	Part Number
J7	Wurth Elektronik	691351500002
J15	Wurth Elektronik	691351500008
J16	Wurth Elektronik	691351500016

Notes:
1.) Wiring should be 75°C or higher insulated copper, with the appropriate voltage and current rating.
2.) Chassis ground must be connected to the ground of the premises wiring system, in accordance with NEC and local codes. Connection must be made using a wire conductor.
3.) Customer is responsible for branch circuit protection.
4.) Operating current transformers with the secondary winding open can result in a high voltage across the secondary terminals which may be dangerous to personnel or equipment.
5.) Current transformers should be centered around conductor.
6.) Load(s) have an integral 3% line reactance or equivalent dc bus choke to optimize Active Filter utilization, consult TCI for Active Filter capacity with less than 3%.
7.) CT's are customer installed, and external to the Active Filter.
8.) Available network interface depends on CM Module HMI option or enclosure type. Reference the HGA IOM or HMI Schematic / Connection Diagram 28283–1

THE INFORMATION AND DESIGNS CONTAINED IN THIS DRAWING ARE CONFIDENTIAL AND THE PROPRIETARY PROPERTY OF ALLIED MOTION TECHNOLOGIES INC. AND ITS SUBSIDIARIES. NEITHER THIS DESIGN NOR ANY INFORMATION CONTAINED IN THIS DRAWING MAY BE REPRODUCED OR DISCLOSED TO OTHERS WITHOUT THE EXPRESS WRITTEN CONSENT OF ALLIED MOTION TECHNOLOGIES INC. AND ITS SUBSIDIARIES.

NO	REVISION	DATE	BY
V	pg5 CT1/3a reverse H1/H2 X1/X2	3/24/25	MJS
U	FS requests & Pg4 CT update	9/18/24	MJS
T	6564 add Gen2 30/50A pg1	2/6/24	MJS
S	ECO 6235 Consistency Update	10/12/23	MJS
R	5762 CT consistency	11/2/21	MJS
Q	Update tables & add 350/700	8/6/20	MJS

TOLERANCES (EXCEPT AS NOTED)
DECIMAL .XX ±.03 .XXX±.010
FRACTIONAL ±1/32
ANGULAR ±1°

TCI An Allied Motion Company
W132 N10611 Grant Drive
Germantown, WI 53022
©TCI, 2021

CCD, Active Filter, 30–700A

DRN. BY MJS | DATE 11/23/21 | DWG. NO. 25027–3
SCALE n/a | SIZE B | SHT. 1 OF 7

Single Unit Standard Line Side CT Placement & Wiring, 100A-700A & Generation 1 50A

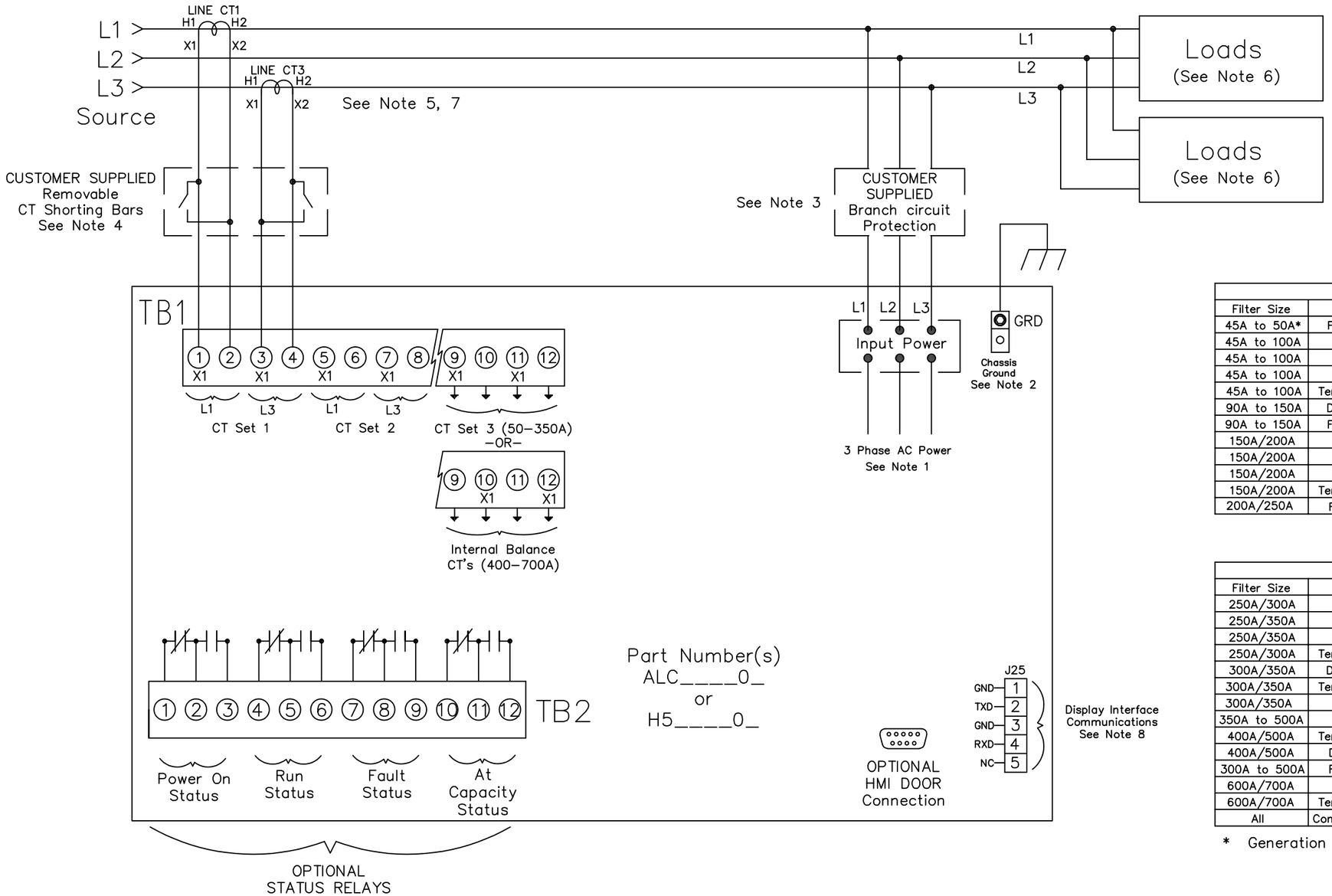

Ground Terminal Wire Size & Tightening Torque			
Filter Size	Wire Size	Torque In–Lbs (Nm)	Wire Type
45 to 100A*	6 – 2/0 Awg	50 (5.7)	CU/AL
150A	6 – 2/0 Awg	50 (5.7)	CU/AL
200A/250A	6 Awg – 250MCM	375 (42.4)	CU
300A/350A	(2) 4 Awg – 600 MCM	500 (57)	CU/AL
400A/500A	(2) 4 Awg – 600 MCM	500 (57)	CU
600A/700A	(3) 2 Awg – 600 MCM	500 (57)	CU/AL

* Generation 1 50A Unit

Terminal Wire Size & Tightening Torque					
Filter Size	MFG	Breaker IC	Wire Size	Torque In–Lbs (Nm)	Wire Type
45A to 50A*	Fuse Block	None	12 Awg – 1/0 Awg	50 (5.7)	CU/AL
45A to 100A	Eaton	65 & 100 kA	6 Awg – 3/0 Awg	50 (5.7)	CU/AL
45A to 100A	ABB	65 & 100 kA	14 Awg – 1/0 Awg	50 (5.7)	CU/AL
45A to 100A	Rockwell	65 & 100 kA	14 Awg – 1/0 Awg	62 (7)	CU Only
45A to 100A	Terminal Block	None	14 Awg – 2/0 Awg	120 (13.6)	CU/AL
90A to 150A	Disconnect	None	4 Awg – 300 MCM	200 (23)	CU/AL
90A to 150A	Fuse Block	None	6 Awg – 250 MCM	375 (42)	CU/AL
150A/200A	Eaton	65 & 100 kA	8 Awg – 350 MCM	177 (20)	CU/AL
150A/200A	ABB	65 & 100 kA	4 Awg – 300 MCM	200 (23)	CU/AL
150A/200A	Rockwell	65 & 100 kA	4 Awg – 300 MCM	200 (23)	CU/AL
150A/200A	Terminal Block	None	3/0 Awg – 350 MCM	275 (31)	CU/AL
200A/250A	Fuse Block	None	4 Awg – 500 MCM	500 (57)	CU/AL

Terminal Wire Size & Tightening Torque					
Filter Size	MFG	Breaker IC	Wire Size	Torque In–Lbs (Nm)	Wire Type
250A/300A	Eaton	65 & 100 kA	250 MCM – 500 MCM	375 (42)	CU/AL
250A/350A	ABB	65 & 100 kA	(2) 3/0 Awg – 250 MCM	275 (31)	CU/AL
250A/350A	Rockwell	65 & 100 kA	(2) 2/0 Awg – 250 MCM	275 (31)	CU/AL
250A/300A	Terminal Block	None	4 Awg – 500 MCM	375 (42)	CU/AL
300A/350A	Disconnect	None	(2) 6 Awg – 350 MCM	500 (57)	CU/AL
300A/350A	Terminal Block	None	(2) 6 Awg – 250 MCM	275 (31)	CU/AL
300A/350A	LSIS	65 & 100 kA	(2) 1/0 Awg – 750 MCM	375 (42)	CU/AL
350A to 500A	Eaton	65 & 100 kA	(2) 2 Awg – 500 MCM	375 (42)	CU/AL
400A/500A	Terminal Block	None	(2) 4 Awg – 500 MCM	450 (51)	CU/AL
400A/500A	Disconnect	None	(2) 2 Awg – 600 MCM	500 (57)	CU/AL
300A to 500A	Fuse Block	None	(2) 4 Awg – 500 MCM	450 (51)	CU/AL
600A/700A	LSIS	65 & 100 kA	(3) 3/0 Awg – 400 MCM	400 (45)	CU/AL
600A/700A	Terminal Block	None	(4) 6 Awg – 350 MCM	275 (31)	CU/AL
All	Control Terminal	All	28 Awg – 14 Awg	4.4 (0.5)	N/A

* Generation 1 50A Unit

Notes:
1.) Wiring should be 75°C or higher insulated copper, with the appropriate voltage and current rating.
2.) Chassis ground must be connected to the ground of the premises wiring system, in accordance with NEC and local codes. Connection must be made using a wire conductor.
3.) Customer is responsible for branch circuit protection.
4.) Operating current transformers with the secondary winding open can result in a high voltage across the secondary terminals which may be dangerous to personnel or equipment.
5.) Current transformers should be centered around conductor.
6.) Load(s) have an integral 3% line reactance or equivalent dc bus choke to optimize Active Filter utilization, consult TCI for Active Filter capacity with less than 3%.
7.) CT's are customer installed, and external to the Active Filter.
8.) Available network interface depends on CM Module HMI option or enclosure type. Reference the HGA IOM or HMI Schematic / Connection Diagram 28283–1

THE INFORMATION AND DESIGNS CONTAINED IN THIS DRAWING ARE CONFIDENTIAL AND THE PROPRIETARY PROPERTY OF ALLIED MOTION TECHNOLOGIES INC. AND ITS SUBSIDIARIES. NEITHER THIS DESIGN NOR ANY INFORMATION CONTAINED IN THIS DRAWING MAY BE REPRODUCED OR DISCLOSED TO OTHERS WITHOUT THE EXPRESS WRITTEN CONSENT OF ALLIED MOTION TECHNOLOGIES INC. AND ITS SUBSIDIARIES.

See Sheet 1 For Rev's

NO	REVISION	DATE	BY

TOLERANCES (EXCEPT AS NOTED)
DECIMAL .XX ±.03 .XXX±.010
FRACTIONAL ±1/32
ANGULAR ±1°

TCI An Allied Motion Company
W132 N10611 Grant Drive
Germantown, WI 53022
©TCI, 2021

CCD, Active Filter, 30–700A

DRN. BY MJS | DATE 11/3/21 | DWG. NO. 25027–3
SCALE n/a | SIZE B | SHT. 2 OF 7

Two Line Control Filters In Parallel:
With sharing CT's, 100A-700A & Generation I 50A

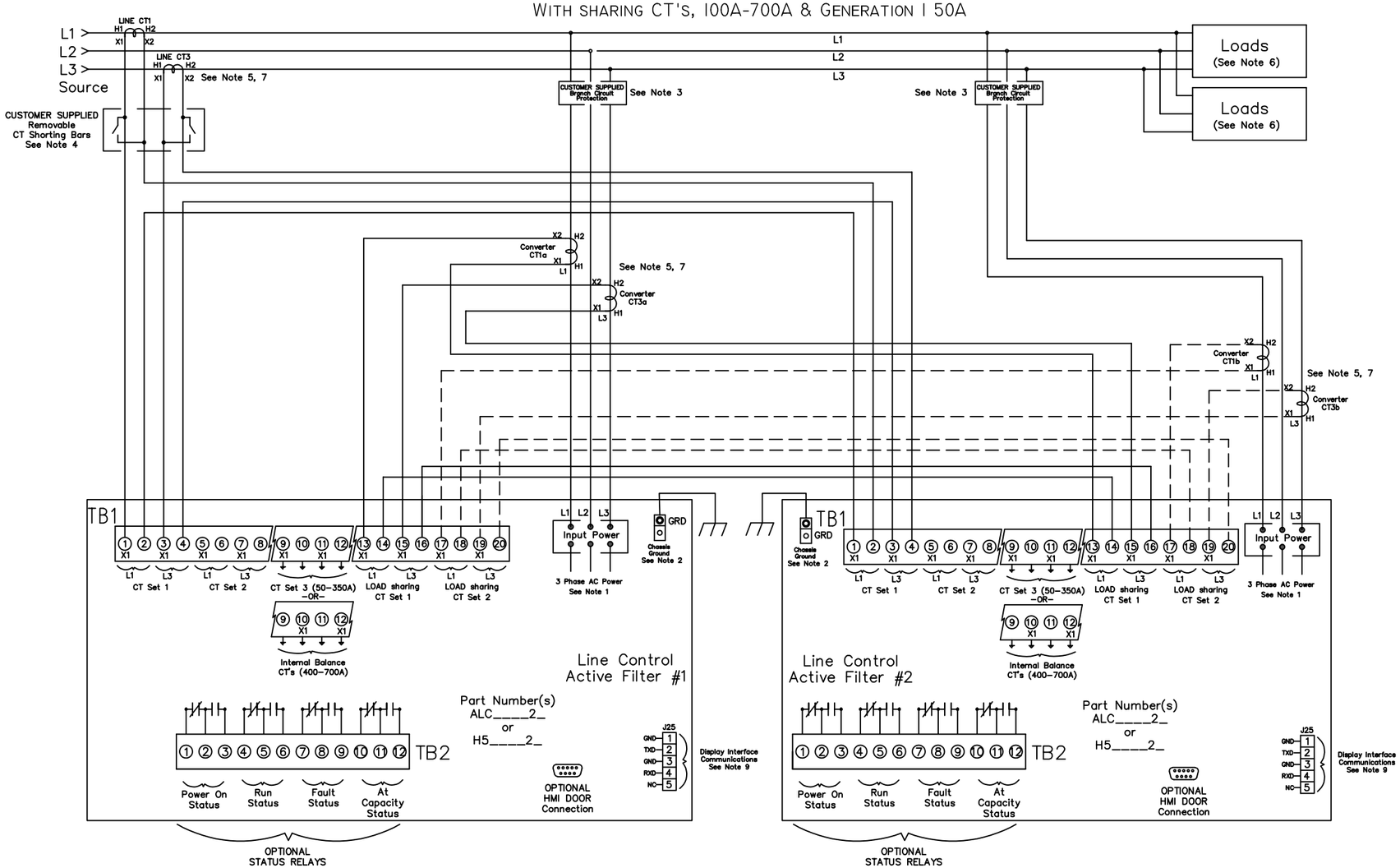

Ground Terminal Wire Size & Tightening Torque			
Filter Size	Wire Size	Torque In-Lbs (Nm)	Wire Type
45 to 100A*	6 – 2/0 Awg	50 (5.7)	CU/AL
150A	6 – 2/0 Awg	50 (5.7)	CU/AL
200A/250A	6 Awg – 250MCM	375 (42.4)	CU
300A/350A	(2) 4 Awg – 600 MCM	500 (57)	CU/AL
400A/500A	(2) 4 Awg – 600 MCM	500 (57)	CU
600A/700A	(3) 2 Awg – 600 MCM	500 (57)	CU/AL

* Generation 1 50A Unit

CONVERTER CT SELECTIONS		
Filter Size	CT Ratio	Part Number
2x ALC100A thru ALC400A	1000:1	KCTF1000D04
2x ALC500A	1200:1	KCTF1200D06
2x ALC600A	1500:1	KCTF1500D06
2x ALC700A	2000:1	KCTF2000D06

Terminal Wire Size & Tightening Torque					
Filter Size	MFG	Breaker IC	Wire Size	Torque In-Lbs (Nm)	Wire Type
45A to 50A*	Fuse Block	None	12 Awg – 1/0 Awg	50 (5.7)	CU/AL
45A to 100A	Eaton	65 & 100 kA	6 Awg – 3/0 Awg	50 (5.7)	CU/AL
45A to 100A	ABB	65 & 100 kA	14 Awg – 1/0 Awg	50 (5.7)	CU/AL
45A to 100A	Rockwell	65 & 100 kA	14 Awg – 1/0 Awg	62 (7)	CU Only
45A to 100A	Terminal Block	None	14 Awg – 2/0 Awg	120 (13.6)	CU/AL
90A to 150A	Disconnect	None	4 Awg – 300 MCM	200 (23)	CU/AL
90A to 150A	Fuse Block	None	6 Awg – 250 MCM	375 (42)	CU/AL
150A/200A	Eaton	65 & 100 kA	8 Awg – 350 MCM	177 (20)	CU/AL
150A/200A	ABB	65 & 100 kA	4 Awg – 300 MCM	200 (23)	CU/AL
150A/200A	Rockwell	65 & 100 kA	4 Awg – 300 MCM	200 (23)	CU/AL
150A/200A	Terminal Block	None	3/0 Awg – 350 MCM	275 (31)	CU/AL
200A/250A	Fuse Block	None	4 Awg – 500 MCM	500 (57)	CU/AL

Terminal Wire Size & Tightening Torque					
Filter Size	MFG	Breaker IC	Wire Size	Torque In-Lbs (Nm)	Wire Type
250A/300A	Eaton	65 & 100 kA	250 MCM – 500 MCM	375 (42)	CU/AL
250A/350A	ABB	65 & 100 kA	(2) 3/0 Awg – 250 MCM	275 (31)	CU/AL
250A/350A	Rockwell	65 & 100 kA	(2) 2/0 Awg – 250 MCM	275 (31)	CU/AL
250A/300A	Terminal Block	None	4 Awg – 500 MCM	375 (42)	CU/AL
300A/350A	Disconnect	None	(2) 6 Awg – 350 MCM	500 (57)	CU/AL
300A/350A	Terminal Block	None	(2) 6 Awg – 250 MCM	275 (31)	CU/AL
300A/350A	LSIS	65 & 100 kA	(2) 1/0 Awg – 750 MCM	375 (42)	CU/AL
350A to 500A	Eaton	65 & 100 kA	(2) 2 Awg – 500 MCM	375 (42)	CU/AL
400A/500A	Terminal Block	None	(2) 4 Awg – 500 MCM	450 (51)	CU/AL
400A/500A	Disconnect	None	(2) 2 Awg – 600 MCM	500 (57)	CU/AL
300A to 500A	Fuse Block	None	(2) 4 Awg – 500 MCM	450 (51)	CU/AL
600A/700A	LSIS	65 & 100 kA	(3) 3/0 Awg – 400 MCM	400 (45)	CU/AL
600A/700A	Terminal Block	None	(4) 6 Awg – 350 MCM	275 (31)	CU/AL
All	Control Terminal	All	28 Awg – 14 Awg	4.4 (0.5)	N/A

* Generation 1 50A Unit

Notes:
1.) Wiring should be 75°C or higher insulated copper, with the appropriate voltage and current rating.
2.) Chassis ground must be connected to the ground of the premises wiring system, in accordance with NEC and local codes. Connection must be made using a wire conductor.
3.) Customer is responsible for branch circuit protection.
4.) Operating current transformers with the secondary winding open can result in a high voltage across the secondary terminals which may be dangerous to personnel or equipment.
5.) Current transformers should be centered around conductor.
6.) Load(s) have an integral 3% line reactance or equivalent dc bus choke to optimize Active Filter utilization, consult TCI for Active Filter capacity with less than 3%.
7.) CT's are customer installed, external to the Active Filter. See Converter CT selections table for CT ratios and part numbers
8.) Active Filter #1 and #2 must be same current rating.
9.) Available network interface depends on CM Module HMI option or enclosure type. Reference the HGA IOM or HMI Schematic / Connection Diagram 28283-1

THE INFORMATION AND DESIGNS CONTAINED IN THIS DRAWING ARE CONFIDENTIAL AND THE PROPRIETARY PROPERTY OF ALLIED MOTION TECHNOLOGIES INC. AND ITS SUBSIDIARIES. NEITHER THIS DESIGN NOR ANY INFORMATION CONTAINED IN THIS DRAWING MAY BE REPRODUCED OR DISCLOSED TO OTHERS WITHOUT THE EXPRESS WRITTEN CONSENT OF ALLIED MOTION TECHNOLOGIES INC. AND ITS SUBSIDIARIES.

See Sheet 1 For Rev's

NO	REVISION	DATE	BY

TOLERANCES (EXCEPT AS NOTED)
DECIMAL .XX ±.03 .XXX±.010
FRACTIONAL ±1/32
ANGULAR ±1°

TCI An Allied Motion Company
W132 N10611 Grant Drive
Germantown, WI 53022
©TCI, 2021

CCD, Active Filter, 30-700A

DRN. BY MJS | DATE 11/23/21 | DWG. NO. 25027-3
SCALE n/a | SIZE B | SHT. 3 OF 7

Two Line Control Filters In Parallel: With Sharing CT's, 30A & 50A Generation 2

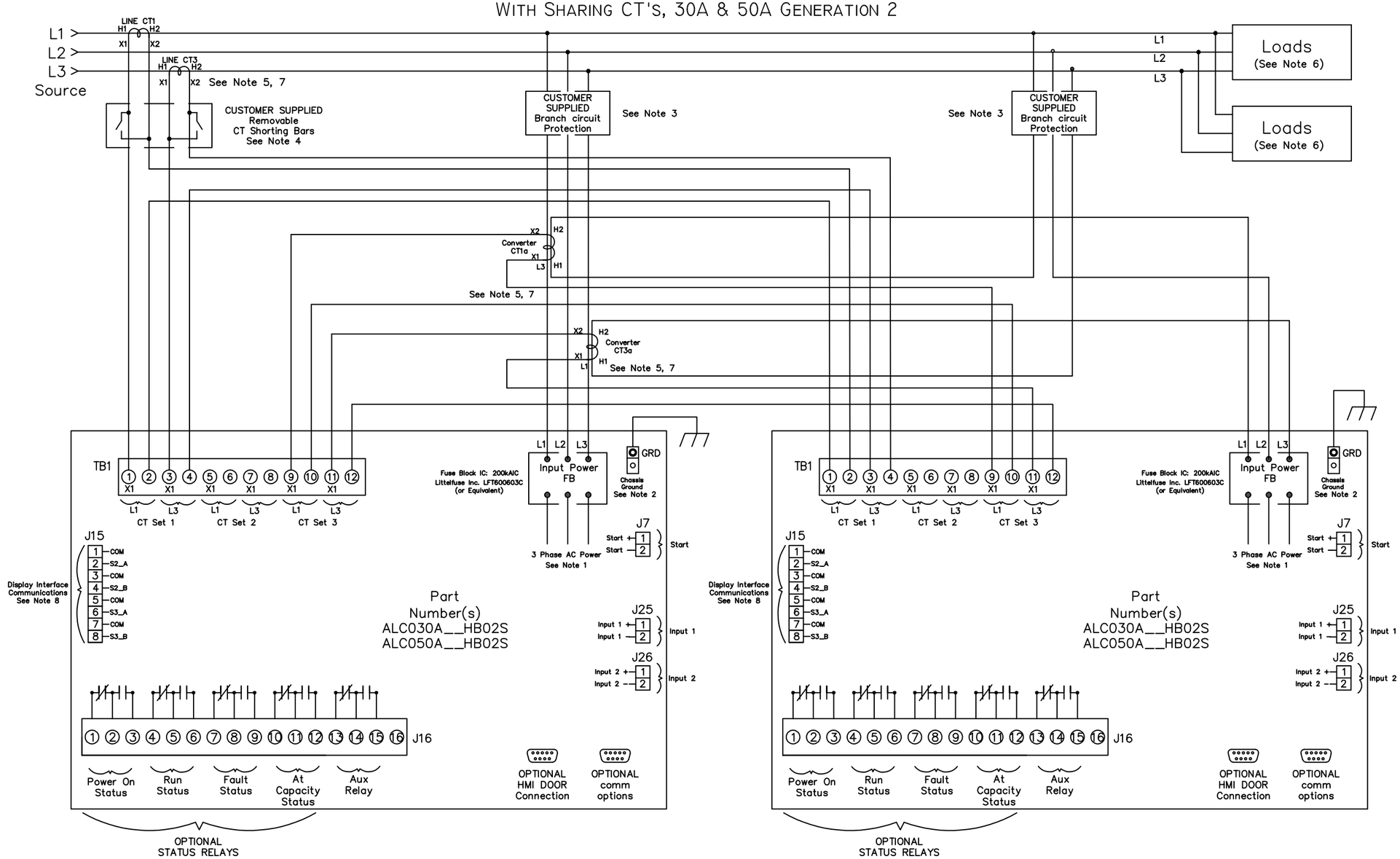

Notes:

1.) Wiring should be 75°C or higher insulated copper, with the appropriate voltage and current rating.
2.) Chassis ground must be connected to the ground of the premises wiring system, in accordance with NEC and local codes. Connection must be made using a wire conductor.
3.) Customer is responsible for branch circuit protection.
4.) Operating current transformers with the secondary winding open can result in a high voltage across the secondary terminals which may be dangerous to personnel or equipment.
5.) Current transformers should be centered around conductor.
6.) Load(s) have an integral 3% line reactance or equivalent dc bus choke to optimize Active Filter utilization, consult TCI for Active Filter capacity with less than 3%.
7.) CT's are customer installed, and external to the Active Filter
8.) Available network interface depends on CM Module HMI option or enclosure type. Reference the HGA IOM or HMI Schematic / Connection Diagram 28283–1

CONVERTER CT SELECTIONS		
Filter Size	CT Ratio	Part Number
2x ALC030A & ALC050A	400:1	KCTF0400C1.3

THE INFORMATION AND DESIGNS CONTAINED IN THIS DRAWING ARE CONFIDENTIAL AND THE PROPRIETARY PROPERTY OF ALLIED MOTION TECHNOLOGIES INC. AND ITS SUBSIDIARIES. NEITHER THIS DESIGN NOR ANY INFORMATION CONTAINED IN THIS DRAWING MAY BE REPRODUCED OR DISCLOSED TO OTHERS WITHOUT THE EXPRESS WRITTEN CONSENT OF ALLIED MOTION TECHNOLOGIES INC. AND ITS SUBSIDIARIES.

See Sheet 1 For Rev's

NO	REVISION	DATE	BY

TOLERANCES (EXCEPT AS NOTED)
DECIMAL .XX ±.03 .XXX±.010
FRACTIONAL ±1/32
ANGULAR ±1°

TCI An Allied Motion Company
W132 N10611 Grant Drive
Germantown, WI 53022
©TCI, 2021

CCD, Active Filter, 30–700A

DRN. BY MJS | DATE 11/23/21 | DWG. NO. 25027–3
SCALE n/a | SIZE B | SHT. 4 OF 7

Single Line Control Filter with Load Side CT Placement & Wiring, 100A-700A & Generation 1 50A

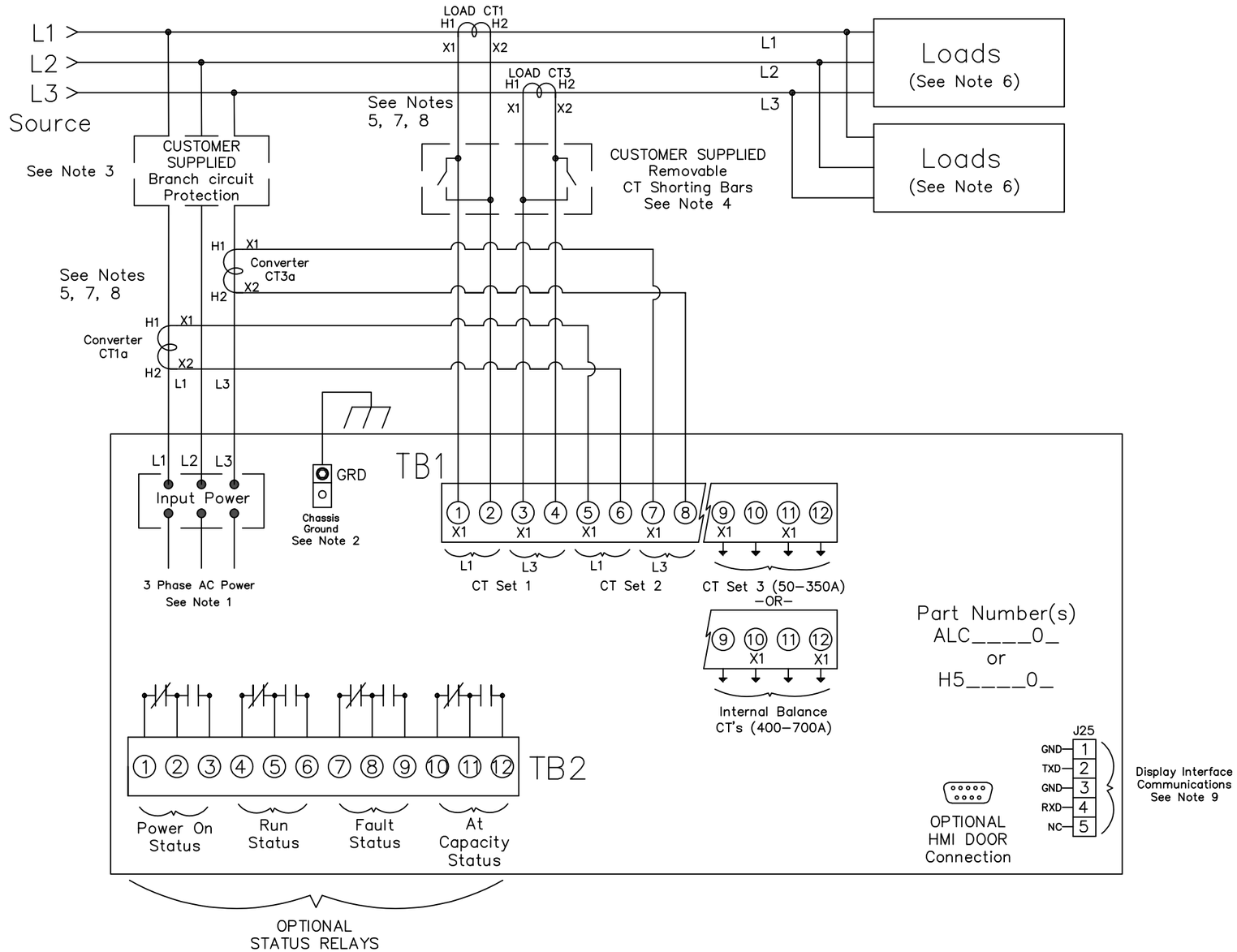

Ground Terminal Wire Size & Tightening Torque			
Filter Size	Wire Size	Torque In–Lbs (Nm)	Wire Type
45 to 100A*	6 – 2/0 Awg	50 (5.7)	CU/AL
150A	6 – 2/0 Awg	50 (5.7)	CU/AL
200A/250A	6 Awg – 250MCM	375 (42.4)	CU
300A/350A	(2) 4 Awg – 600 MCM	500 (57)	CU/AL
400A/500A	(2) 4 Awg – 600 MCM	500 (57)	CU
600A/700A	(3) 2 Awg – 600 MCM	500 (57)	CU/AL

* Generation 1 50A Unit

Terminal Wire Size & Tightening Torque					
Filter Size	MFG	Breaker IC	Wire Size	Torque In–Lbs (Nm)	Wire Type
45A to 50A*	Fuse Block	None	12 Awg – 1/0 Awg	50 (5.7)	CU/AL
45A to 100A	Eaton	65 & 100 kA	6 Awg – 3/0 Awg	50 (5.7)	CU/AL
45A to 100A	ABB	65 & 100 kA	14 Awg – 1/0 Awg	50 (5.7)	CU/AL
45A to 100A	Rockwell	65 & 100 kA	14 Awg – 1/0 Awg	62 (7)	CU Only
45A to 100A	Terminal Block	None	14 Awg – 2/0 Awg	120 (13.6)	CU/AL
90A to 150A	Disconnect	None	4 Awg – 300 MCM	200 (23)	CU/AL
90A to 150A	Fuse Block	None	6 Awg – 250 MCM	375 (42)	CU/AL
150A/200A	Eaton	65 & 100 kA	8 Awg – 350 MCM	177 (20)	CU/AL
150A/200A	ABB	65 & 100 kA	4 Awg – 300 MCM	200 (23)	CU/AL
150A/200A	Rockwell	65 & 100 kA	4 Awg – 300 MCM	200 (23)	CU/AL
150A/200A	Terminal Block	None	3/0 Awg – 350 MCM	275 (31)	CU/AL
200A/250A	Fuse Block	None	4 Awg – 500 MCM	500 (57)	CU/AL

Terminal Wire Size & Tightening Torque					
Filter Size	MFG	Breaker IC	Wire Size	Torque In–Lbs (Nm)	Wire Type
250A/300A	Eaton	65 & 100 kA	250 MCM – 500 MCM	375 (42)	CU/AL
250A/350A	ABB	65 & 100 kA	(2) 3/0 Awg – 250 MCM	275 (31)	CU/AL
250A/350A	Rockwell	65 & 100 kA	(2) 2/0 Awg – 250 MCM	275 (31)	CU/AL
250A/300A	Terminal Block	None	4 Awg – 500 MCM	375 (42)	CU/AL
300A/350A	Disconnect	None	(2) 6 Awg – 350 MCM	500 (57)	CU/AL
300A/350A	Terminal Block	None	(2) 6 Awg – 250 MCM	275 (31)	CU/AL
300A/350A	LSIS	65 & 100 kA	(2) 1/0 Awg – 750 MCM	375 (42)	CU/AL
350A to 500A	Eaton	65 & 100 kA	(2) 2 Awg – 500 MCM	375 (42)	CU/AL
400A/500A	Terminal Block	None	(2) 4 Awg – 500 MCM	450 (51)	CU/AL
400A/500A	Disconnect	None	(2) 2 Awg – 600 MCM	500 (57)	CU/AL
300A to 500A	Fuse Block	None	(2) 4 Awg – 500 MCM	450 (51)	CU/AL
600A/700A	LSIS	65 & 100 kA	(3) 3/0 Awg – 400 MCM	400 (45)	CU/AL
600A/700A	Terminal Block	None	(4) 6 Awg – 350 MCM	275 (31)	CU/AL
All	Control Terminal	All	28 Awg – 14 Awg	4.4 (0.5)	N/A

* Generation 1 50A Unit

Notes:
1.) Wiring should be 75°C or higher insulated copper, with the appropriate voltage and current rating.
2.) Chassis ground must be connected to the ground of the premises wiring system, in accordance with NEC and local codes. Connection must be made using a wire conductor.
3.) Customer is responsible for branch circuit protection.
4.) Operating current transformers with the secondary winding open can result in a high voltage across the secondary terminals which may be dangerous to personnel or equipment.
5.) Current transformers should be centered around conductor.
6.) Load(s) have an integral 3% line reactance or equivalent dc bus choke to optimize Active Filter utilization, consult TCI for Active Filter capacity with less than 3%.
7.) CT's are customer installed, and external to the Active Filter.
8.) Load and Converter CT's must be same ratio.
9.) Available network interface depends on CM Module HMI option or enclosure type. Reference the HGA IOM or HMI Schematic / Connection Diagram 28283–1

THE INFORMATION AND DESIGNS CONTAINED IN THIS DRAWING ARE CONFIDENTIAL AND THE PROPRIETARY PROPERTY OF ALLIED MOTION TECHNOLOGIES INC. AND ITS SUBSIDIARIES. NEITHER THIS DESIGN NOR ANY INFORMATION CONTAINED IN THIS DRAWING MAY BE REPRODUCED OR DISCLOSED TO OTHERS WITHOUT THE EXPRESS WRITTEN CONSENT OF ALLIED MOTION TECHNOLOGIES INC. AND ITS SUBSIDIARIES.

See Sheet 1 For Rev's

NO	REVISION	DATE	BY

TOLERANCES (EXCEPT AS NOTED)
DECIMAL .XX ±.03 .XXX±.010
FRACTIONAL ±1/32
ANGULAR ±1°

TCI An Allied Motion Company
W132 N10611 Grant Drive
Germantown, WI 53022
©TCI, 2021

CCD, Active Filter, 30–700A

DRN. BY MJS | DATE 11/23/21 | DWG. NO. 25027–3
SCALE n/a | SIZE B | SHT. 5 OF 7

Legacy (Pre 2023) Two Filters In Parallel:
Filter #1 Has Standard Line Side CT Placement & Wiring
Filter #2 Has Load Side Software

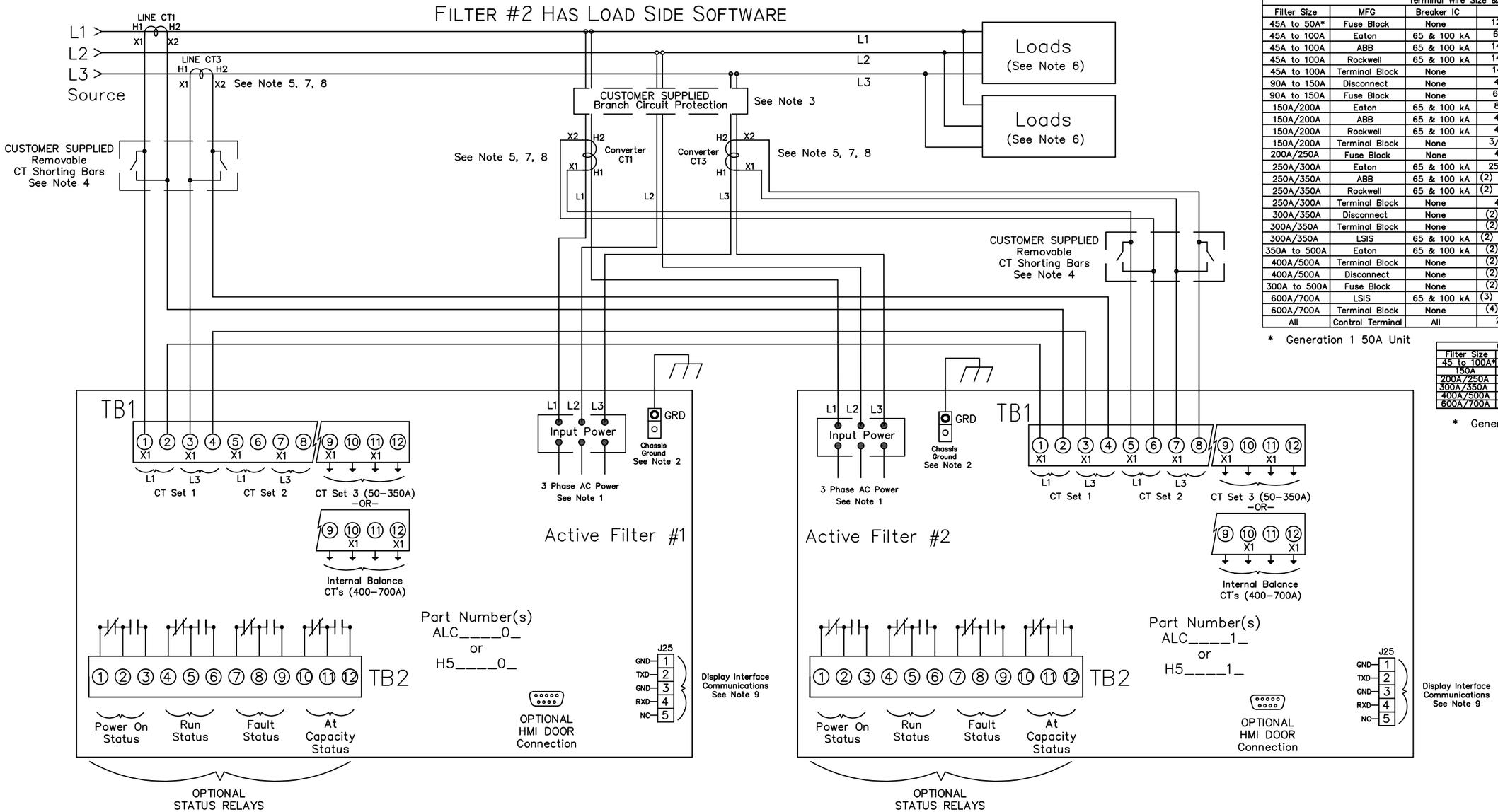

Terminal Wire Size & Tightening Torque					
Filter Size	MFG	Breaker IC	Wire Size	Torque In–Lbs (Nm)	Wire Type
45A to 50A*	Fuse Block	None	12 Awg – 1/0 Awg	50 (5.7)	CU/AL
45A to 100A	Eaton	65 & 100 kA	6 Awg – 3/0 Awg	50 (5.7)	CU/AL
45A to 100A	ABB	65 & 100 kA	14 Awg – 1/0 Awg	50 (5.7)	CU/AL
45A to 100A	Rockwell	65 & 100 kA	14 Awg – 1/0 Awg	62 (7)	CU Only
45A to 100A	Terminal Block	None	14 Awg – 2/0 Awg	120 (13.6)	CU/AL
90A to 150A	Disconnect	None	4 Awg – 300 MCM	200 (23)	CU/AL
90A to 150A	Fuse Block	None	6 Awg – 250 MCM	375 (42)	CU/AL
150A/200A	Eaton	65 & 100 kA	8 Awg – 350 MCM	177 (20)	CU/AL
150A/200A	ABB	65 & 100 kA	4 Awg – 300 MCM	200 (23)	CU/AL
150A/200A	Rockwell	65 & 100 kA	4 Awg – 300 MCM	200 (23)	CU/AL
150A/200A	Terminal Block	None	3/0 Awg – 350 MCM	275 (31)	CU/AL
200A/250A	Fuse Block	None	4 Awg – 500 MCM	500 (57)	CU/AL
250A/300A	Eaton	65 & 100 kA	250 MCM – 500 MCM	375 (42)	CU/AL
250A/350A	ABB	65 & 100 kA	(2) 3/0 Awg – 250 MCM	275 (31)	CU/AL
250A/350A	Rockwell	65 & 100 kA	(2) 2/0 Awg – 250 MCM	275 (31)	CU/AL
250A/300A	Terminal Block	None	4 Awg – 500 MCM	375 (42)	CU/AL
300A/350A	Disconnect	None	(2) 6 Awg – 350 MCM	500 (57)	CU/AL
300A/350A	Terminal Block	None	(2) 6 Awg – 250 MCM	275 (31)	CU/AL
300A/350A	LSIS	65 & 100 kA	(2) 1/0 Awg – 750 MCM	375 (42)	CU/AL
350A to 500A	Eaton	65 & 100 kA	(2) 2 Awg – 500 MCM	375 (42)	CU/AL
400A/500A	Terminal Block	None	(2) 4 Awg – 500 MCM	450 (51)	CU/AL
400A/500A	Disconnect	None	(2) 2 Awg – 600 MCM	500 (57)	CU/AL
300A to 500A	Fuse Block	None	(2) 4 Awg – 500 MCM	450 (51)	CU/AL
600A/700A	LSIS	65 & 100 kA	(3) 3/0 Awg – 400 MCM	400 (45)	CU/AL
600A/700A	Terminal Block	None	(4) 6 Awg – 350 MCM	275 (31)	CU/AL
All	Control Terminal	All	28 Awg – 14 Awg	4.4 (0.5)	N/A

* Generation 1 50A Unit

Ground Terminal Wire Size & Tightening Torque			
Filter Size	Wire Size	Torque In–Lbs (Nm)	Wire Type
45 to 100A*	6 – 2/0 Awg	50 (5.7)	CU/AL
150A	6 – 2/0 Awg	50 (5.7)	CU/AL
200A/250A	6 Awg – 250MCM	375 (42.4)	CU
300A/350A	(2) 4 Awg – 600 MCM	500 (57)	CU/AL
400A/500A	(2) 4 Awg – 600 MCM	500 (57)	CU
600A/700A	(3) 2 Awg – 600 MCM	500 (57)	CU/AL

* Generation 1 50A Unit

Notes:
1.) Wiring should be 75°C or higher insulated copper, with the appropriate voltage and current rating.
2.) Chassis ground must be connected to the ground of the premises wiring system, in accordance with NEC and local codes. Connection must be made using a wire conductor.
3.) Customer is responsible for branch circuit protection.
4.) Operating current transformers with the secondary winding open can result in a high voltage across the secondary terminals which may be dangerous to personnel or equipment.
5.) Current transformers should be centered around conductor.
6.) Load(s) have an integral 3% line reactance or equivalent dc bus choke to optimize Active Filter utilization, consult TCI for Active Filter capacity with less than 3%.
7.) CT's are customer installed, and external to the Active Filter.
8.) Line and Converter CT's must be same ratio.
9.) Available network interface depends on CM Module HMI option or enclosure type. Reference the HGA IOM or HMI Schematic / Connection Diagram 28283–1

THE INFORMATION AND DESIGNS CONTAINED IN THIS DRAWING ARE CONFIDENTIAL AND THE PROPRIETARY PROPERTY OF ALLIED MOTION TECHNOLOGIES INC. AND ITS SUBSIDIARIES. NEITHER THIS DESIGN NOR ANY INFORMATION CONTAINED IN THIS DRAWING MAY BE REPRODUCED OR DISCLOSED TO OTHERS WITHOUT THE EXPRESS WRITTEN CONSENT OF ALLIED MOTION TECHNOLOGIES INC. AND ITS SUBSIDIARIES.

NO	REVISION	DATE	BY
	See Sheet 1 For Rev's		

TOLERANCES (EXCEPT AS NOTED)
DECIMAL .XX ±.03 .XXX±.010
FRACTIONAL ±1/32
ANGULAR ±1°

TCI An Allied Motion Company
W132 N10611 Grant Drive
Germantown, WI 53022
©TCI, 2021

CCD, Active Filter, 30–700A

DRN. BY MJS | DATE 11/23/21 | DWG. NO. 25027–3
SCALE n/a | SIZE B | SHT. 6 OF 7

Legacy (pre 2023) Single Unit Load Side CT Placement & Wiring

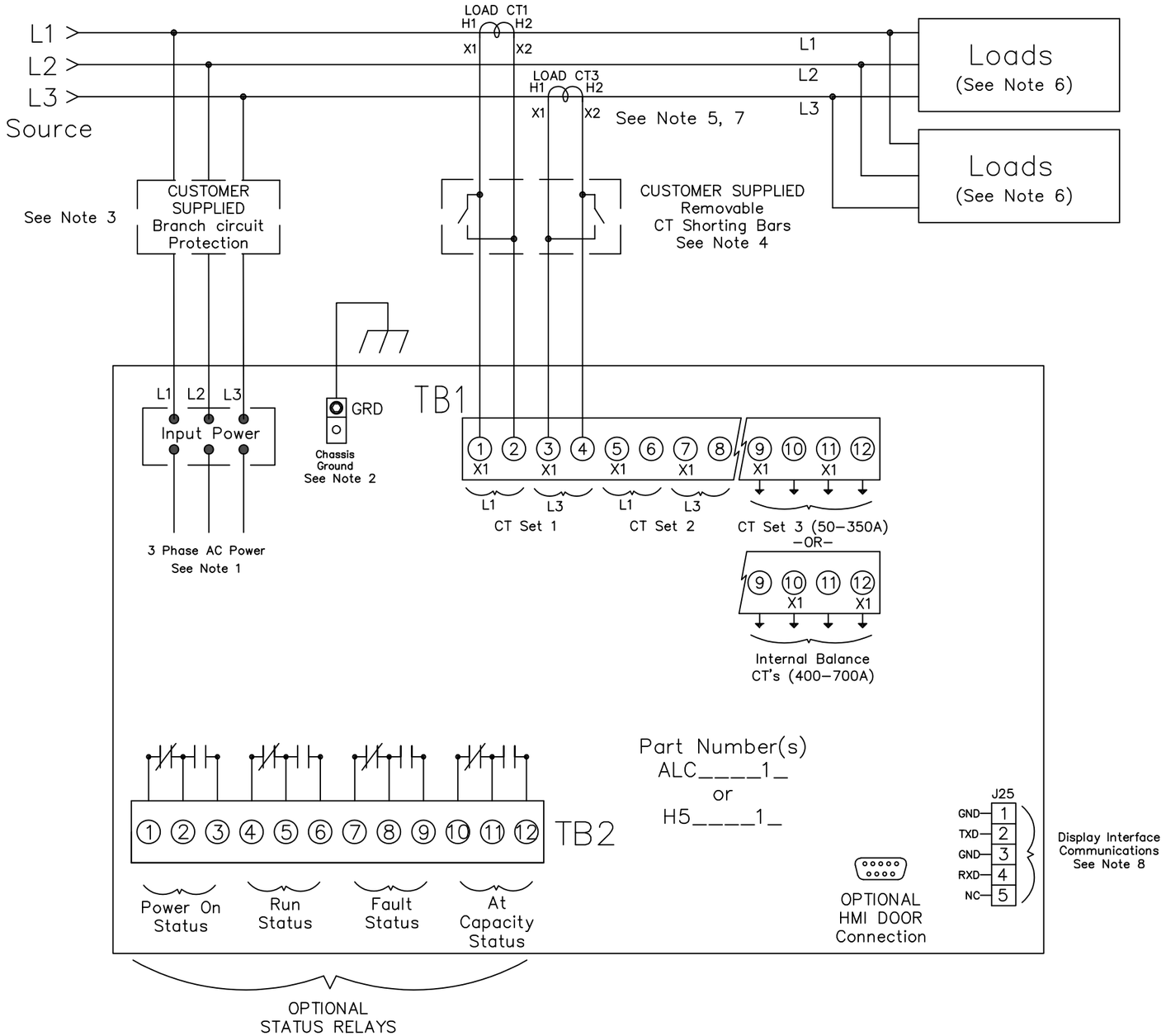

Ground Terminal Wire Size & Tightening Torque			
Filter Size	Wire Size	Torque In–Lbs (Nm)	Wire Type
45 to 100A*	6 – 2/0 Awg	50 (5.7)	CU/AL
150A	6 – 2/0 Awg	50 (5.7)	CU/AL
200A/250A	6 Awg – 250MCM	375 (42.4)	CU
300A/350A	(2) 4 Awg – 600 MCM	500 (57)	CU/AL
400A/500A	(2) 4 Awg – 600 MCM	500 (57)	CU
600A/700A	(3) 2 Awg – 600 MCM	500 (57)	CU/AL

* Generation 1 50A Unit

Terminal Wire Size & Tightening Torque					
Filter Size	MFG	Breaker IC	Wire Size	Torque In–Lbs (Nm)	Wire Type
45A to 50A*	Fuse Block	None	12 Awg – 1/0 Awg	50 (5.7)	CU/AL
45A to 100A	Eaton	65 & 100 kA	6 Awg – 3/0 Awg	50 (5.7)	CU/AL
45A to 100A	ABB	65 & 100 kA	14 Awg – 1/0 Awg	50 (5.7)	CU/AL
45A to 100A	Rockwell	65 & 100 kA	14 Awg – 1/0 Awg	62 (7)	CU Only
45A to 100A	Terminal Block	None	14 Awg – 2/0 Awg	120 (13.6)	CU/AL
90A to 150A	Disconnect	None	4 Awg – 300 MCM	200 (23)	CU/AL
90A to 150A	Fuse Block	None	6 Awg – 250 MCM	375 (42)	CU/AL
150A/200A	Eaton	65 & 100 kA	8 Awg – 350 MCM	177 (20)	CU/AL
150A/200A	ABB	65 & 100 kA	4 Awg – 300 MCM	200 (23)	CU/AL
150A/200A	Rockwell	65 & 100 kA	4 Awg – 300 MCM	200 (23)	CU/AL
150A/200A	Terminal Block	None	3/0 Awg – 350 MCM	275 (31)	CU/AL
200A/250A	Fuse Block	None	4 Awg – 500 MCM	500 (57)	CU/AL

Terminal Wire Size & Tightening Torque					
Filter Size	MFG	Breaker IC	Wire Size	Torque In–Lbs (Nm)	Wire Type
250A/300A	Eaton	65 & 100 kA	250 MCM – 500 MCM	375 (42)	CU/AL
250A/350A	ABB	65 & 100 kA	(2) 3/0 Awg – 250 MCM	275 (31)	CU/AL
250A/350A	Rockwell	65 & 100 kA	(2) 2/0 Awg – 250 MCM	275 (31)	CU/AL
250A/300A	Terminal Block	None	4 Awg – 500 MCM	375 (42)	CU/AL
300A/350A	Disconnect	None	(2) 6 Awg – 350 MCM	500 (57)	CU/AL
300A/350A	Terminal Block	None	(2) 6 Awg – 250 MCM	275 (31)	CU/AL
300A/350A	LSIS	65 & 100 kA	(2) 1/0 Awg – 750 MCM	375 (42)	CU/AL
350A to 500A	Eaton	65 & 100 kA	(2) 2 Awg – 500 MCM	375 (42)	CU/AL
400A/500A	Terminal Block	None	(2) 4 Awg – 500 MCM	450 (51)	CU/AL
400A/500A	Disconnect	None	(2) 2 Awg – 600 MCM	500 (57)	CU/AL
300A to 500A	Fuse Block	None	(2) 4 Awg – 500 MCM	450 (51)	CU/AL
600A/700A	LSIS	65 & 100 kA	(3) 3/0 Awg – 400 MCM	400 (45)	CU/AL
600A/700A	Terminal Block	None	(4) 6 Awg – 350 MCM	275 (31)	CU/AL
All	Control Terminal	All	28 Awg – 14 Awg	4.4 (0.5)	N/A

* Generation 1 50A Unit

Notes:

1.) Wiring should be 75°C or higher insulated copper, with the appropriate voltage and current rating.
2.) Chassis ground must be connected to the ground of the premises wiring system, in accordance with NEC and local codes. Connection must be made using a wire conductor.
3.) Customer is responsible for branch circuit protection.
4.) Operating current transformers with the secondary winding open can result in a high voltage across the secondary terminals which may be dangerous to personnel or equipment.
5.) Current transformers should be centered around conductor.
6.) Load(s) have an integral 3% line reactance or equivalent dc bus choke to optimize Active Filter utilization, consult TCI for Active Filter capacity with less than 3%.
7.) CT's are customer installed, and external to the Active Filter.
8.) Available network interface depends on CM Module HMI option or enclosure type. Reference the HGA IOM or HMI Schematic / Connection Diagram 28283–1

THE INFORMATION AND DESIGNS CONTAINED IN THIS DRAWING ARE CONFIDENTIAL AND THE PROPRIETARY PROPERTY OF ALLIED MOTION TECHNOLOGIES INC. AND ITS SUBSIDIARIES. NEITHER THIS DESIGN NOR ANY INFORMATION CONTAINED IN THIS DRAWING MAY BE REPRODUCED OR DISCLOSED TO OTHERS WITHOUT THE EXPRESS WRITTEN CONSENT OF ALLIED MOTION TECHNOLOGIES INC. AND ITS SUBSIDIARIES.

See Sheet 1 For Rev's

NO	REVISION	DATE	BY

TOLERANCES (EXCEPT AS NOTED)
DECIMAL .XX ±.03 .XXX±.010
FRACTIONAL ±1/32
ANGULAR ±1°

TCI An Allied Motion Company
W132 N10611 Grant Drive
Germantown, WI 53022
©TCI, 2021

CCD, Active Filter, 30–700A

DRN. BY MJS | DATE 11/23/21 | DWG. NO. 25027–3
SCALE n/a | SIZE B | SHT. 7 OF 7