Allient Part Number	Ohms x 3	Amps x 3	Watts	Approx Weight (LBS)
22950	0.20	74.43	1108	10

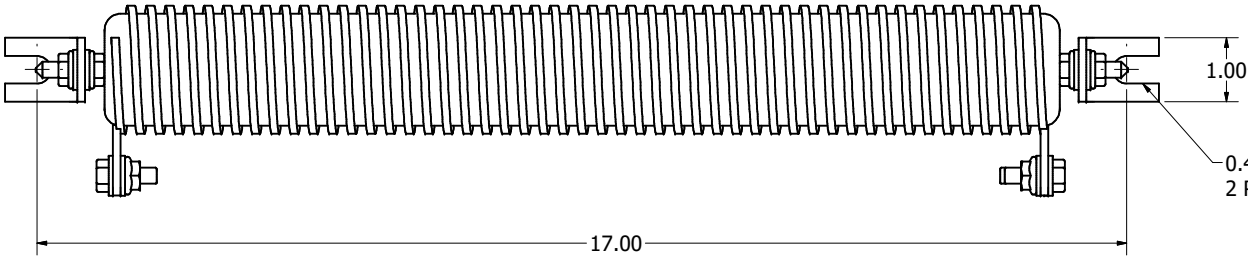

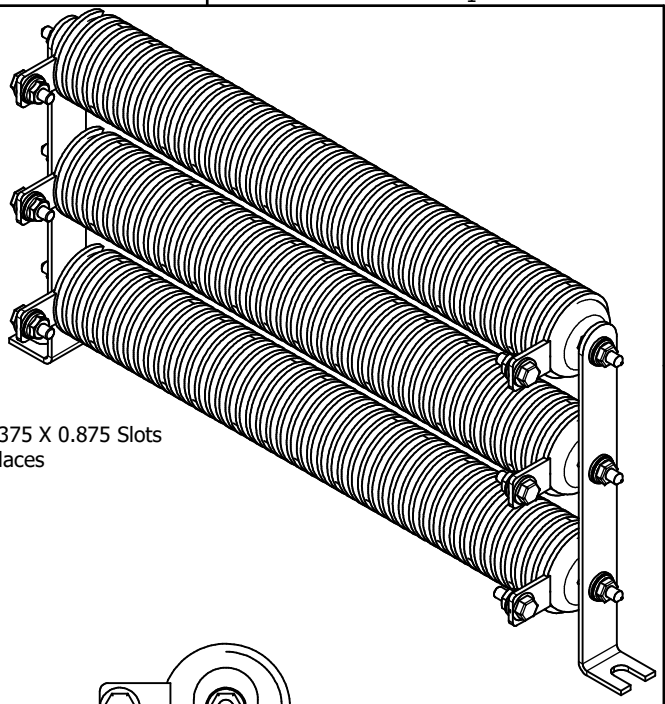

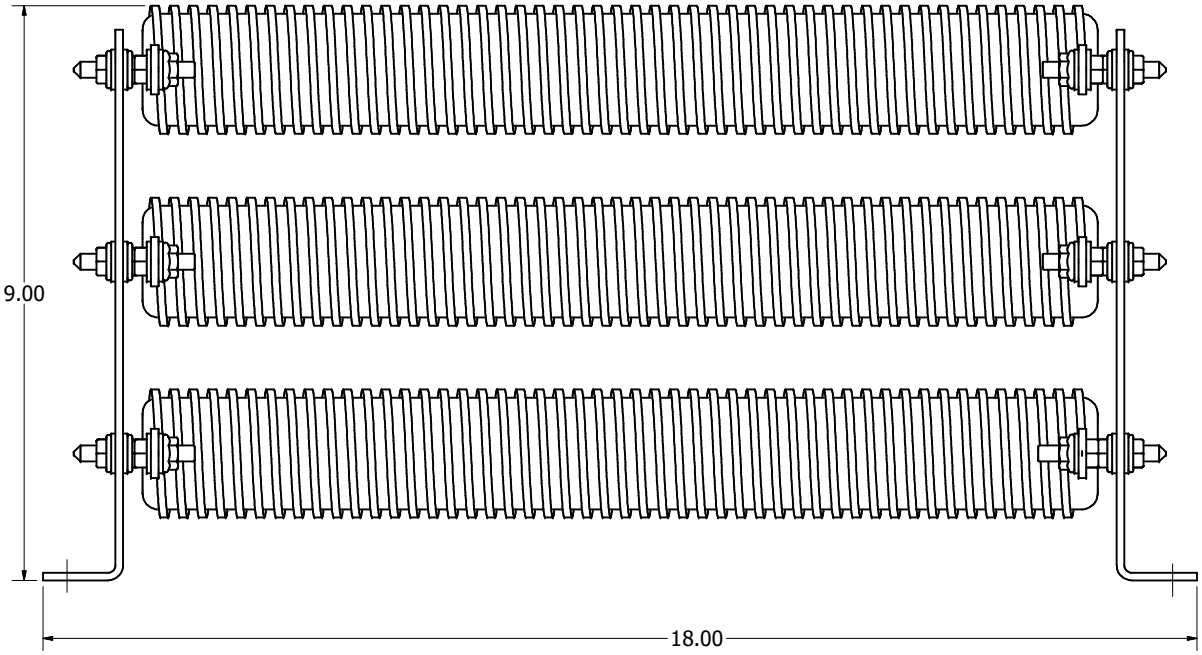

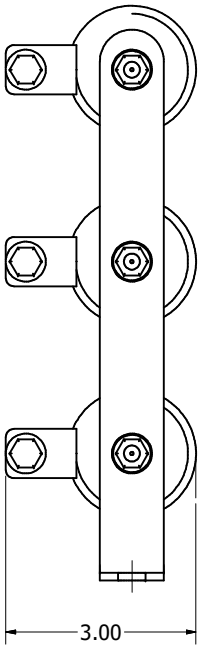

Customer Is Responsible For Installation
To Meet All NationalAnd Local Electrical Codes.

Material(s) Shall be RoHS Compliant

F	7400	Update part to UL Version	2/18/26	DSW	
NO	ECO	REVISION	DATE	BY	

DIMENSIONS IN INCHES (EXCEPT AS NOTED)
TOLERANCES (EXCEPT AS NOTED)
DECIMAL
.XX ± .03
.XXX ± .010
FRACTIONAL
± 1/32
ANGULAR
± 1°

THE INFORMATION AND DESIGNS CONTAINED IN THIS DRAWING ARE CONFIDENTIAL AND THE PROPRIETARY PROPERTY OF ALLIENT INC. AND ITS SUBSIDIARIES. NEITHER THIS DESIGN NOR ANY INFORMATION CONTAINED IN THIS DRAWING MAY BE REPRODUCED OR DISCLOSED TO OTHERS WITHOUT THE EXPRESS WRITTEN CONSENT OF ALLIENT INC. AND ITS SUBSIDIARIES.

DRN. BY: DSW
DATE: 11/12/12

Allient Power

W132N10611 Grant Drive
Germantown, WI 53022
© 2026 Allient Inc.

Resistor Assembly, UL Version
0.20 Ohm, 1108W,3PH

SCALE: 1:1.5
DRN. NO. 22950DG
SIZE C
SHT.1 OF 1