575 Rated Voltage, 600 Max Voltage, Low Z, Impedance.							
Part Number	Horsepower (HP)	Motor Amps (A)	Maximum Amps (A)	Inductance (uH)	Weight (LBS)	Losses (W)	Attached Lug Kit
KDRULX41LE01	900	864	900	26.6	600	1075	SLK16

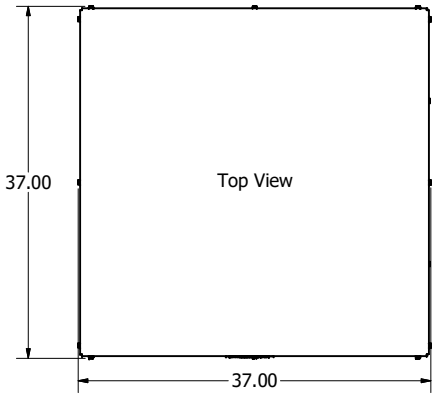

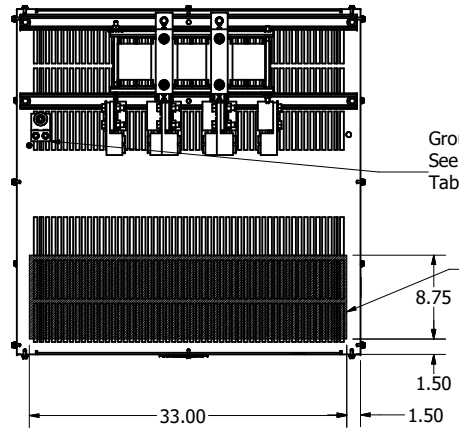

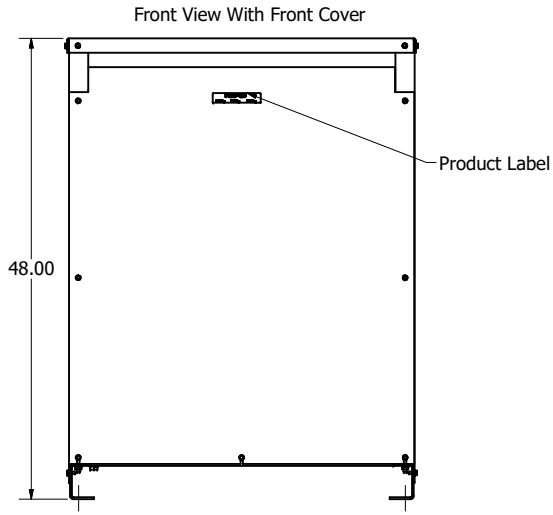

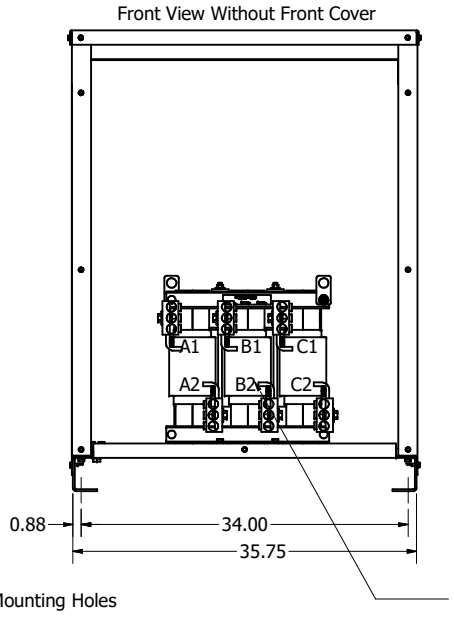

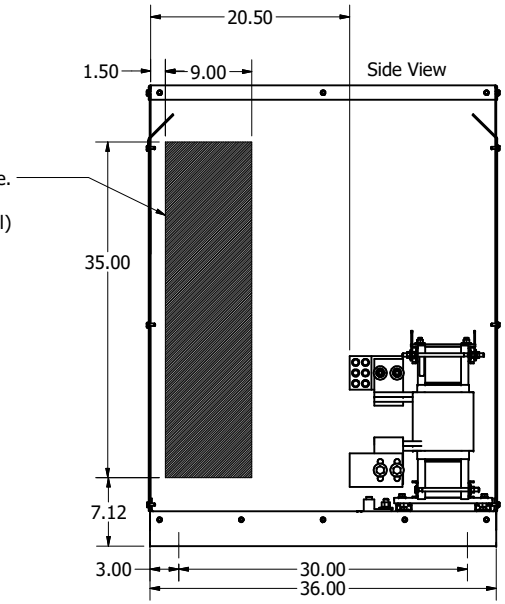

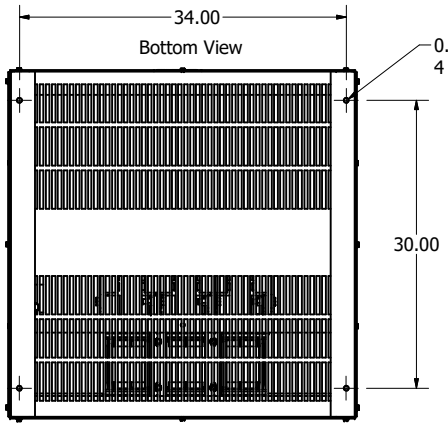

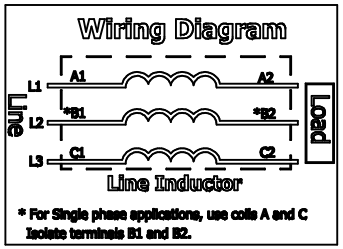

Note:
1. UL file number: cULus Listed File E116124.
2. KDR Drive Inductors Comply With The Thermal and Altitude Standards Set Forth by NEMA ST20-1992.
3. For Terminal Torques And Wire Size See, KDR IOM Manual, Part Number 30895
4. Material(s) Shall be RoHS Compliant
5. Customer Is Responsible For Installation To Meet All National And Local Electrical Codes.

DIMENSIONS IN INCHES (EXCEPT AS NOTED)
TOLERANCES (EXCEPT AS NOTED)
DECIMAL
.XX ± .25
.XXX ± .10
FRACTIONAL
± 1/32
ANGULAR
± 1°

THE INFORMATION AND DESIGNS CONTAINED IN THIS DRAWING ARE CONFIDENTIAL AND THE PROPRIETARY PROPERTY OF ALLIENT INC. AND ITS SUBSIDIARIES. NEITHER THIS DESIGN NOR ANY INFORMATION CONTAINED IN THIS DRAWING MAY BE REPRODUCED OR DISCLOSED TO OTHERS WITHOUT THE EXPRESS WRITTEN CONSENT OF ALLIENT INC. AND ITS SUBSIDIARIES.

NO	ECO	REVISION	DATE	BY
B	7551	Drawing chg. 107616-2 to 109959-5	07/01/26	DSW

DRN. BY: DSW
DATE: 7/1/26

Allient Power
W132N10611 Grant Drive
Germantown, WI 53022
© 2026 Allient Inc.

KDRULX44lE01 (Lugs Attached)
575V, 864A, 900HP, 3 Phase, Type 1

SCALE: 1/10
DRN. NO. 109959-5DG
SIZE C
SHT.1 OF 1