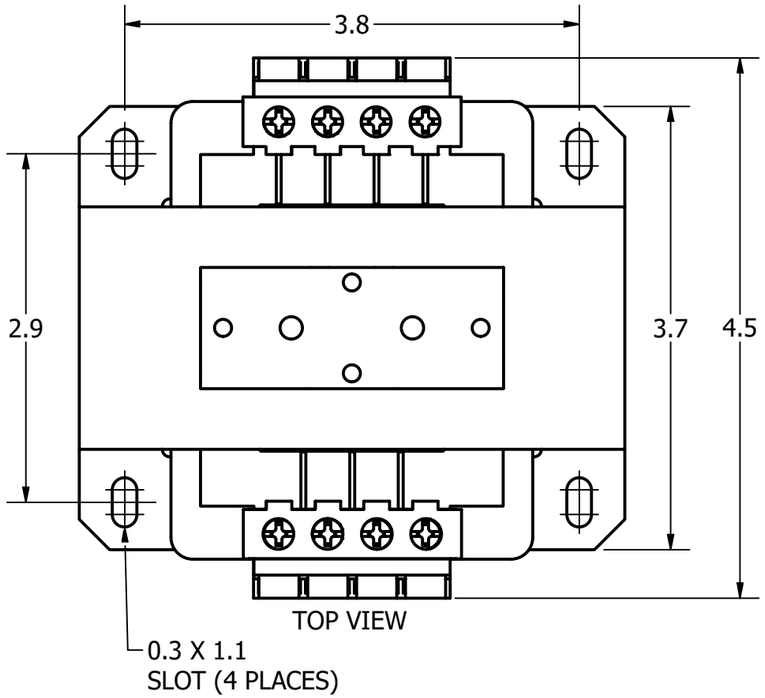

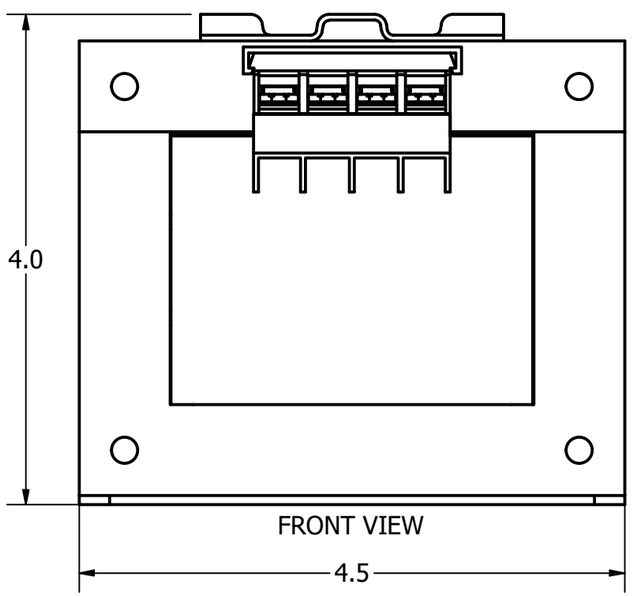

Voltage Group	Part Number	Description
A	BB350DMF	CPT, CTL XFMR, 350VA, 220x440, 230x460, 240x480:110,115,120
B	BB350BSF	CPT, CTL XFMR, 350VA, 240x480 : 24
C	BB350ASF	CPT, CTL XFMR, 350VA, 120x240:24
E	BB350EMF	CPT, CTL XFMR, 350VA, 550/575/600:110,115,120
F	BB350WQF	CPT, CTL XFMR, 350VA, 208/277:120
G	BB350CMF	CPT, CTL XFMR, 350VA, 200/220/440, 208/230/460, 240/480:110,115,120
I	BB350ZPF	CPT, CTL XFMR, 350VA,380/400/415:110/220
J	BB250CLF	CPT, CTL XFMR, 250VA,200/220/440,208/230/460,240/480:23/110,24/115,25/120
J	BB300CLF	CPT, CTL XFMR, 300VA,200/220/440,208/230/460,240/480:23/110,24/115,25/120
K	BB350BAF	CPT, CTL XFMR, 350VA,240x480:120x240

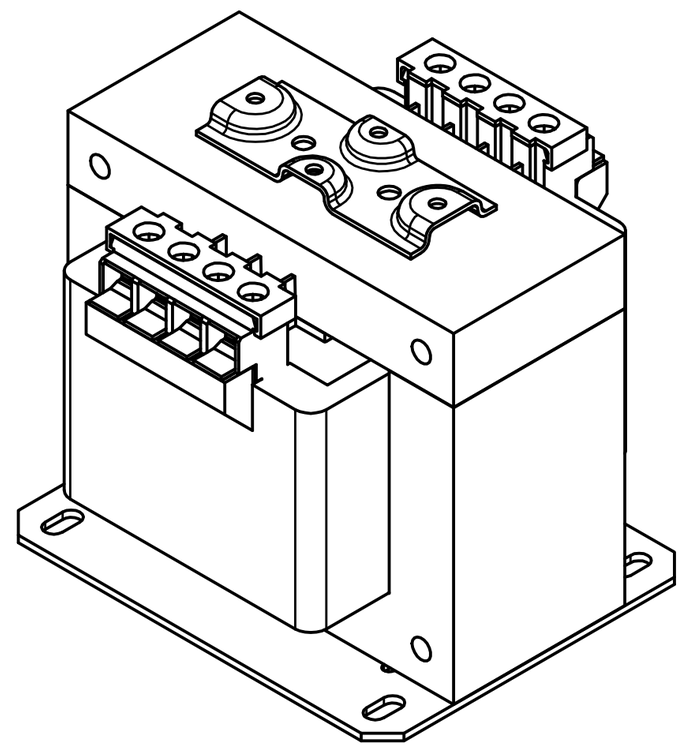

General Spcifications	
Rated V.A.	350
Rated Frequency	50/60
Insulation Class	Class 130°C (266°F) Insulation System 80°C (176°F)
Agency Approvals	UL,CUL
Estimated Weight (lbs.)	13.6

Note: For Connection Diagram Please See Catalog 33563

DIMENSIONS IN INCHES (EXCEPT AS NOTED)

TOLERANCES (EXCEPT AS NOTED)
DECIMAL
.XX ± .03
.XXX ± .010
FRACTIONAL
± 1/32
ANGULAR
± 1°

THE INFORMATION AND DESIGNS CONTAINED IN THIS DRAWING ARE CONFIDENTIAL AND THE PROPRIETARY PROPERTY OF ALLIENT INC. AND ITS SUBSIDIARIES. NEITHER THIS DESIGN NOR ANY INFORMATION CONTAINED IN THIS DRAWING MAY BE REPRODUCED OR DISCLOSED TO OTHERS WITHOUT THE EXPRESS WRITTEN CONSENT OF ALLIENT INC. AND ITS SUBSIDIARIES.

NO	ECO	REVISION	DATE	BY
A		Release	05/07/26	EJB

DRN. BY: EJB
DATE: 05/07/26

Allient Power
W132N10611 Grant Drive
Germantown, WI 53022
© 2026 Allient Inc.

CPT CTL XFMR
Frame '8'

SCALE: 1:1.25
DRN. NO. 109948
SIZE B
SHT.1 OF 1