V1K Part Number	Max Voltage	Amps	Phase	Weight (LBS)
V1K25A03	600	25	3	29
V1K25A03T	600	25	3	29

T - Thermal Switch Option

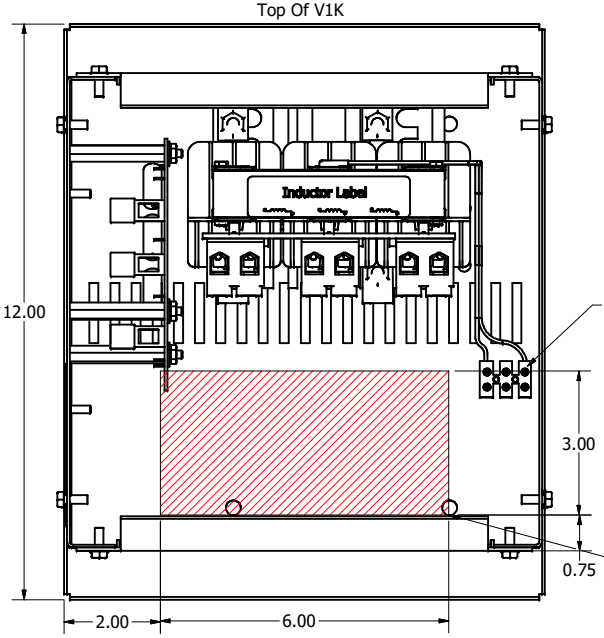

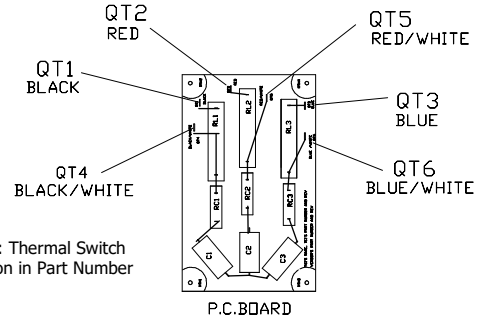

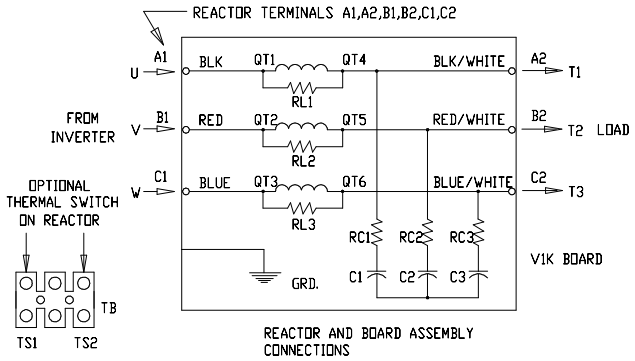

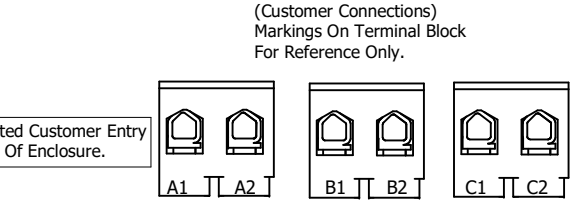

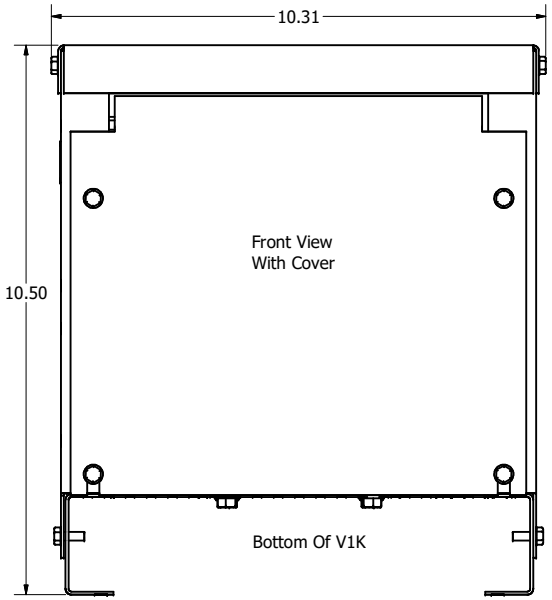

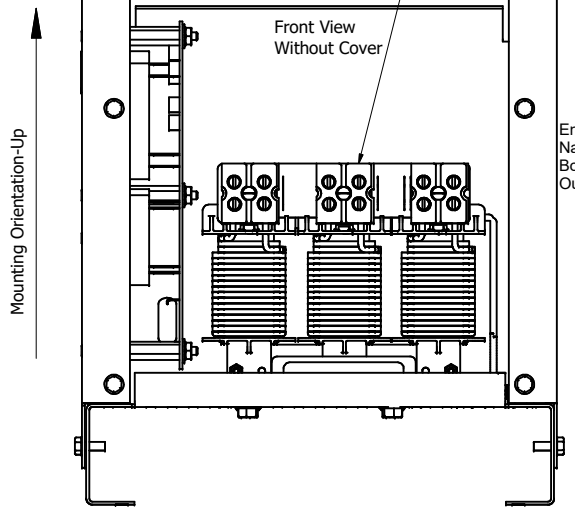

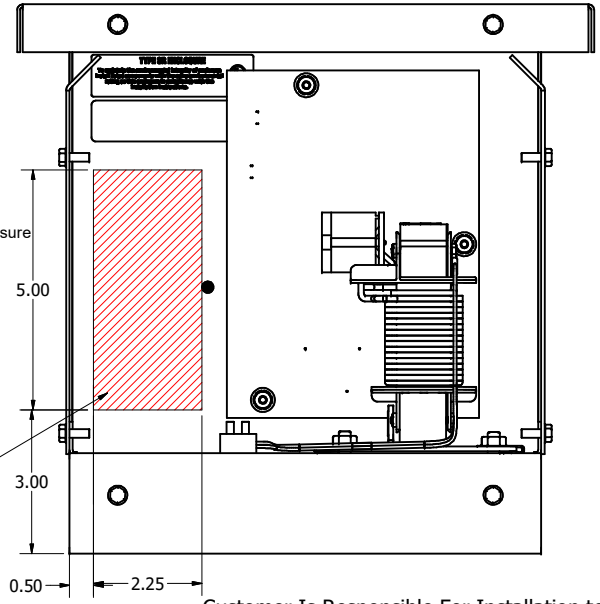

See V1K Installation Guide For
Terminal Wire Size And Torque Information.

Note: Maintain Clearance of 3 Inches On All Sides To Other Equipment.

Note: Use Only Hubs Or Fittings That Comply
With UL514B For Type 3R Enclosures.

Customer Is Responsible For Installation to
Meet All National And Local Electrical Codes.

Material(s) Shall be RoHS Compliant

DIMENSIONS IN INCHES (EXCEPT AS NOTED).
TOLERANCES (EXCEPT AS NOTED)
DECIMAL
.XX ± .25
.XXX ± .10
FRACTIONAL
± 1/32
ANGULAR
± 1°

THE INFORMATION AND DESIGNS CONTAINED IN THIS DRAWING ARE CONFIDENTIAL AND THE PROPRIETARY PROPERTY OF ALLIENT INC. AND ITS SUBSIDIARIES. NEITHER THIS DESIGN NOR ANY INFORMATION CONTAINED IN THIS DRAWING MAY BE REPRODUCED OR DISCLOSED TO OTHERS WITHOUT THE EXPRESS WRITTEN CONSENT OF ALLIENT INC. AND ITS SUBSIDIARIES.

NO	ECO	REVISION	DATE	BY
E	7396	Update Drawing Views	2/11/26	DSW
D	7310	KDRB1R to KDRBA1R	12/2/25	DSW

DRN. BY: DSW
DATE: 12/2/25

Allient Power
W132N10611 Grant Drive
Germantown, WI 53022
© 2026 Allient Inc.

V1K, Enclosed Type 3R
25 Amps

SCALE: 1/2
DRN. NO. 109881DG
SIZE C
SHT.1 OF 1