TCI Part Number	Rated Amps (A)	Rated Voltage (V)	Hz	---uH ±5%	Approx Weight (LBS)	Flag Terminal Hole Size	Available Lug Kit
KTRMG480A	480	480	60	100	455	0.53	SLK13

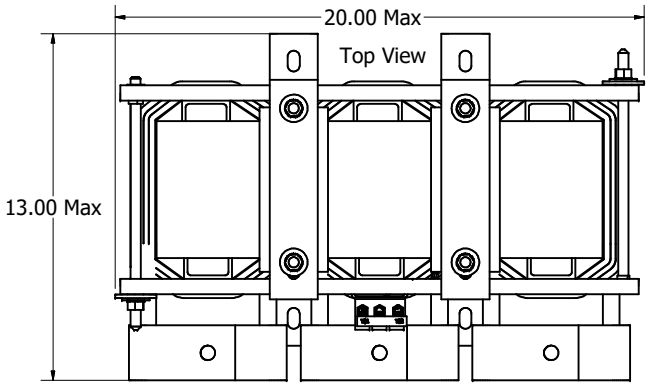

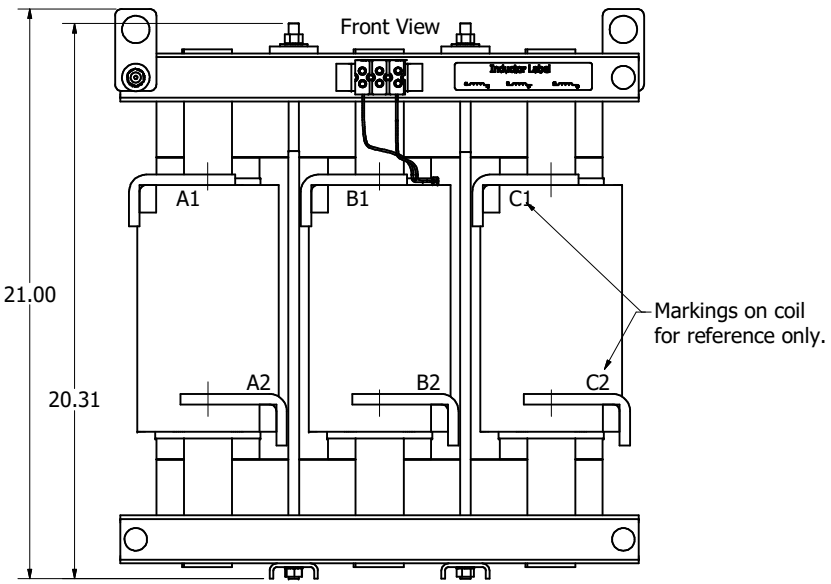

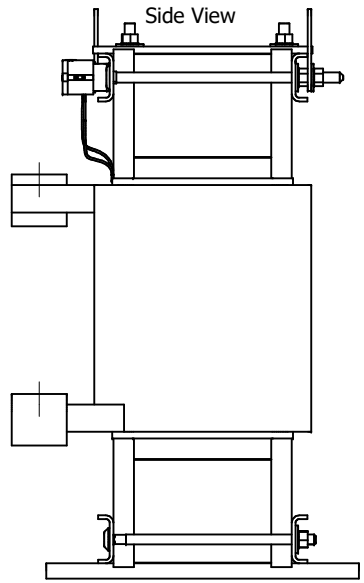

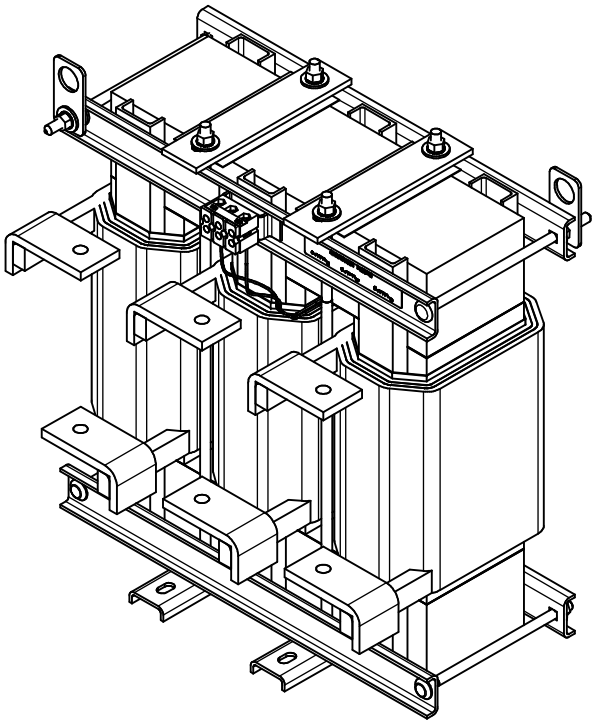

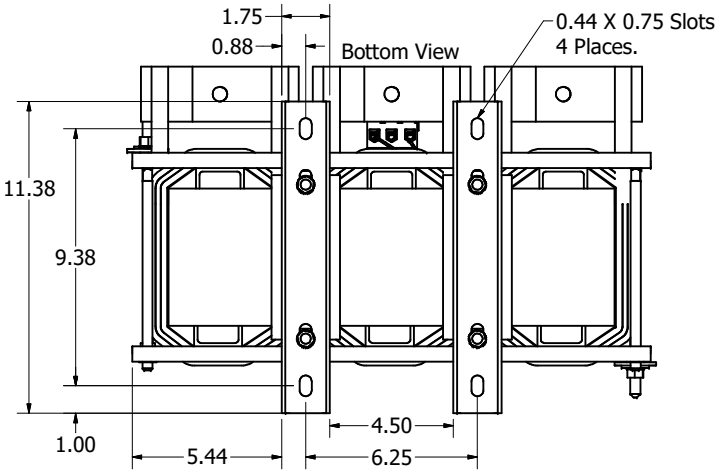

Thermal Switch
Terminal Block

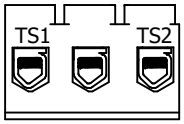

Wire Range: 18 AWG To 4 AWG.
Torque: 20 LB-IN (2.3 Nm)
Switch Opens on Temperature Rise
Contact Rating: 6A @ 120 VAC

Customer Is Responsible For Installation to
Meet All National And Local Electrical Codes.

Material(s) Shall be RoHS Compliant

DIMENSIONS IN INCHES (EXCEPT AS NOTED)
TOLERANCES (EXCEPT AS NOTED)
DECIMAL
.XX ± .25
.XXX ± .10
FRACTIONAL
± 1/32
ANGULAR
± 1°

THE INFORMATION AND DESIGNS CONTAINED IN THIS DRAWING ARE CONFIDENTIAL AND THE PROPRIETARY PROPERTY OF ALLIENT INC. AND ITS SUBSIDIARIES. NEITHER THIS DESIGN NOR ANY INFORMATION CONTAINED IN THIS DRAWING MAY BE REPRODUCED OR DISCLOSED TO OTHERS WITHOUT THE EXPRESS WRITTEN CONSENT OF ALLIENT INC. AND ITS SUBSIDIARIES.

NO	ECO	REVISION	DATE	BY
K	7525	Drawing change 108097 to 108097-13	05/29/26	DSW
J	7277	No Tie Wraps On Thermal Switch	10/28/25	DSW
I	7264	Match Revs, Add 0.125 Tolerance	10/16/25	DSW
B	6768	Add Thermal Switch Sheet	9/10/24	DSW
A		As Designed	5/27/19	JRN

DRN. BY: JRN
DATE: 5/27/19

Allient Power
W132N10611 Grant Drive
Germantown, WI 53022
© 2026 Allient Inc.

KTRMG480A
Inductor Drawings

SCALE: 1:3.5
DRN. NO. 108097-13DG
SIZE C
SHT.1 OF 1