| TCI Part Number | Rated Amps (A) | Rated Voltage (V) | Hz | ---uH ±5% | Approx Weight (LBS) | Terminal Hole Size (Inches) |
|---|---|---|---|---|---|---|
| KTRMG80C | 80 | 600 | 60 | 747 | 95 | 0.28 |
| KTRMG130C | 130 | 600 | 60 | 460 | 120 | 0.28 |

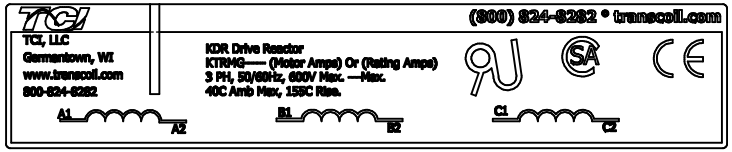


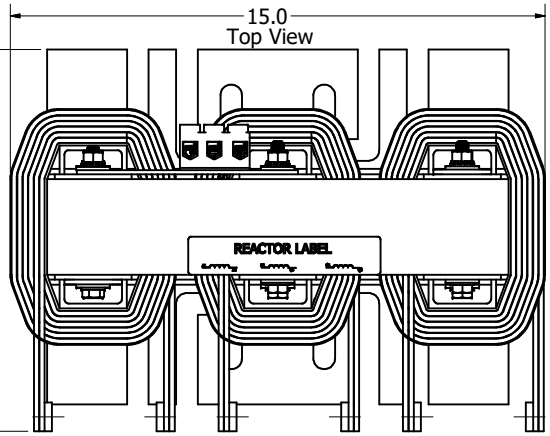


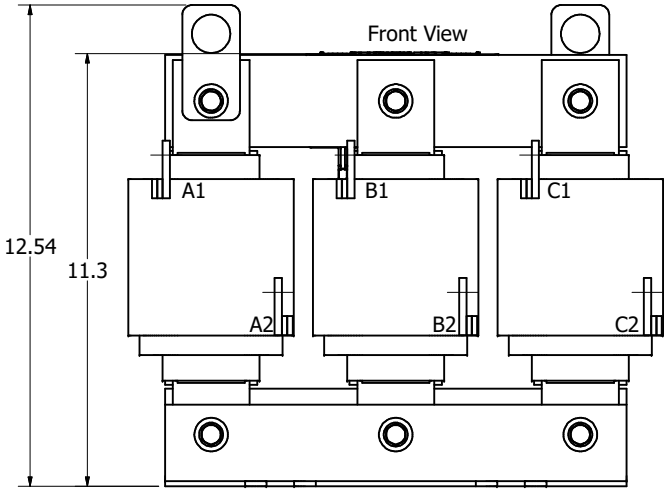


KTRMG130C

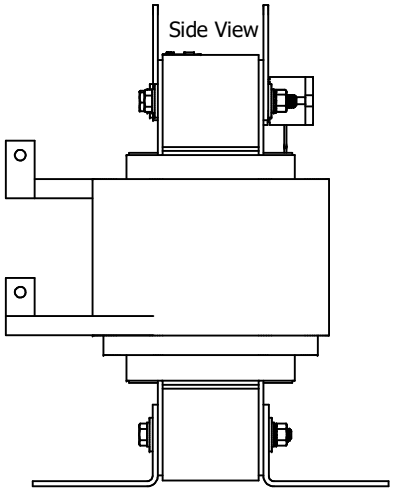


KTRMG80C

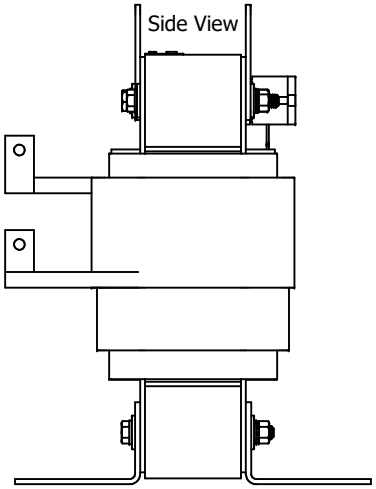


**(Customer Connections) Markings On Coils For Reference Only.**

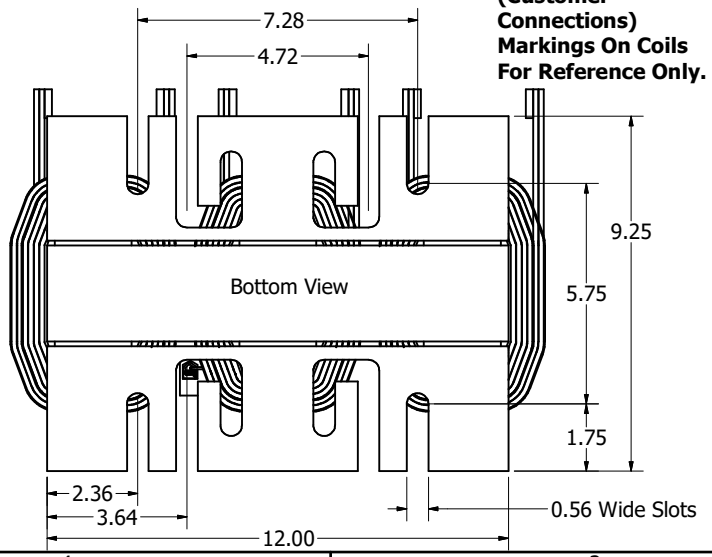


Thermal Switch
Terminal Block

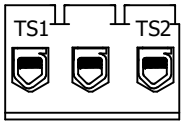


Wire Range: 18 AWG To 4 AWG.
Torque: 20 LB-IN (2.3 Nm)

Switch Opens on Temperature Rise
Contact Rating: 6A @ 120 VAC

Customer Is Responsible For Installation
To Meet All NationalAnd Local Electrical Codes.

Material(s) Shall be RoHS Compliant

THE INFORMATION AND DESIGNS CONTAINED IN THIS DRAWING ARE CONFIDENTIAL AND THE PROPRIETARY PROPERTY OF ALLIED MOTION TECHNOLOGIES INC. AND ITS SUBSIDIARIES. NEITHER THIS DESIGN NOR ANY INFORMATION CONTAINED IN THIS DRAWING MAY BE REPRODUCED OR DISCLOSED TO OTHERS WITHOUT THE EXPRESS WRITTEN CONSENT OF ALLIED MOTION TECHNOLOGIES INC. AND ITS SUBSIDIARIES.

| NO | REVISION | DATE | BY |
|---|---|---|---|
| G | 6600, Busbar to Flag | 3/7/2024 | DSW |

TOLERANCES (EXCEPT AS NOTED)
DECIMAL .XX ± .25 .XXX ± .10
FRACTIONAL ± 1/32
ANGULAR ± 1°

TCI An Allied Motion Company
W132N10611 Grant Drive
Germantown, WI 53022
© 2024 TCI, LLC

KTRMG L Frame, Copper Flag
Reactor Drawing

DRN. BY: JRN | DATE: 04/09/19 | 108083DG
SCALE: 1/2.5 | APRVD: | SIZE: C | SHT 1 OF 1