480 Rated Voltage, 600 Max Voltage, High Z, Impedance.								
Part Number	Horsepower (HP)	Motor Amps (A)	Maximum Amps (A)	Inductance (uH)	Weight (LBS)	Losses (W)	Terminal Hole Size (Inches)	Available Lug Kit
KDRF2HE3R	60	77	77	408	63	226	0.313	SLK10

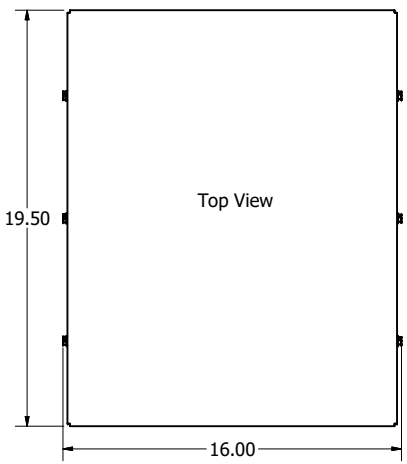

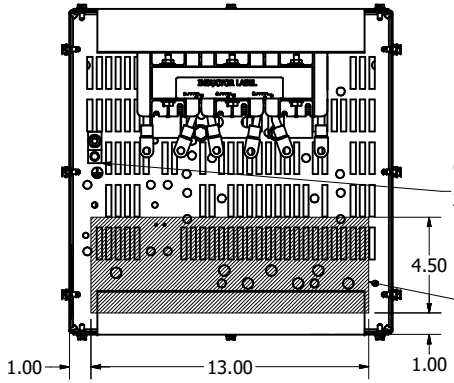

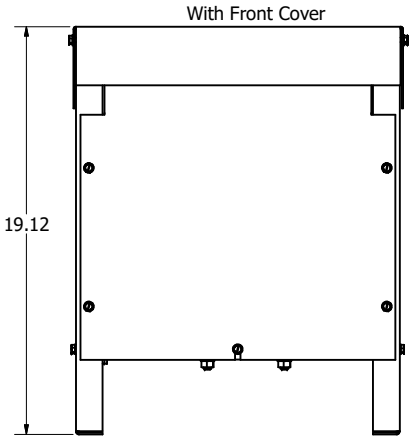

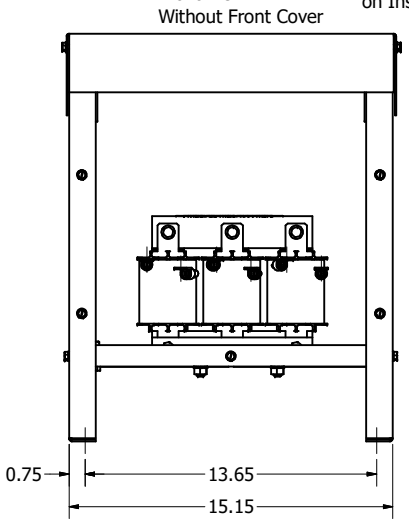

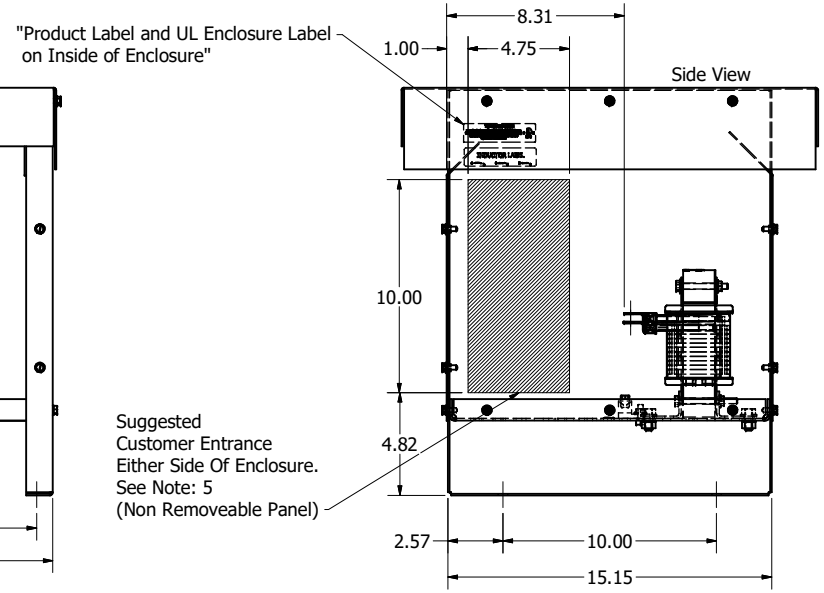

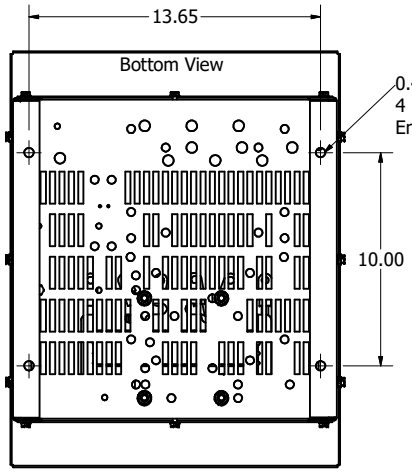

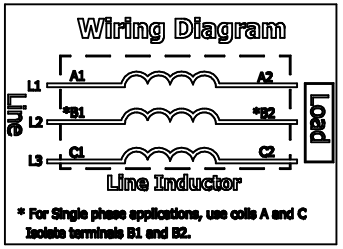

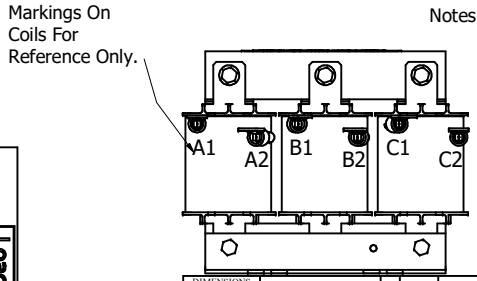

Notes:

1. UL file number: cULus Listed File E116124.
2. KDR Drive Reactors Comply With The Thermal and Altitude Standards Set Forth by NEMA ST20-1992.
3. KDR IOM Manual Part Number 30895
4. Material(s) Shall be RoHS Compliant
5. Customer Is Responsible For Installation To Meet All National And Local Electrical Codes.

DIMENSIONS IN INCHES (EXCEPT AS NOTED)
TOLERANCES (EXCEPT AS NOTED)
DECIMAL
.XX ± .25
.XXX ± .10
FRACTIONAL
± 1/32
ANGULAR
± 1°

THE INFORMATION AND DESIGNS CONTAINED IN THIS DRAWING ARE CONFIDENTIAL AND THE PROPRIETARY PROPERTY OF ALLIENT INC. AND ITS SUBSIDIARIES. NEITHER THIS DESIGN NOR ANY INFORMATION CONTAINED IN THIS DRAWING MAY BE REPRODUCED OR DISCLOSED TO OTHERS WITHOUT THE EXPRESS WRITTEN CONSENT OF ALLIENT INC. AND ITS SUBSIDIARIES.

NO	ECO	REVISION	DATE	BY
C	7560	Update Title Block	6/23/26	DSW
B	5018	Bend Terminals on Inductor	01/3/20	DSW
A	4608	Terminal Block to Ring Terms	01/16/19	DSW

DRN. BY: DSW
DATE: 01/16/19

Allient Power
W132N10611 Grant Drive
Germantown, WI 53022
© 2026 Allient Inc.

KDRF2HE3R
Enclosed Type 3R

SCALE: 1:4.5
DRN. NO. 107990-1DG
SIZE C
SHT.1 OF 1