MSD Part Number	HP	Voltage (V)	Amps (A)	Weight (LBS)	Pressure Terminal Wire Range
MSN0600A300	500	480	600	713	(3) 600MCM-2AWG

NOTE: FOR TERMINAL TORQUE SEE IOM MANUAL.

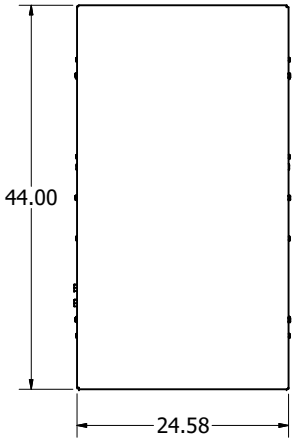

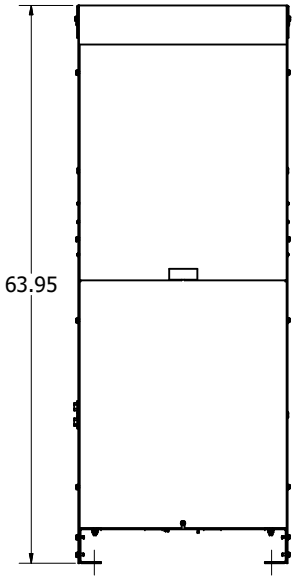

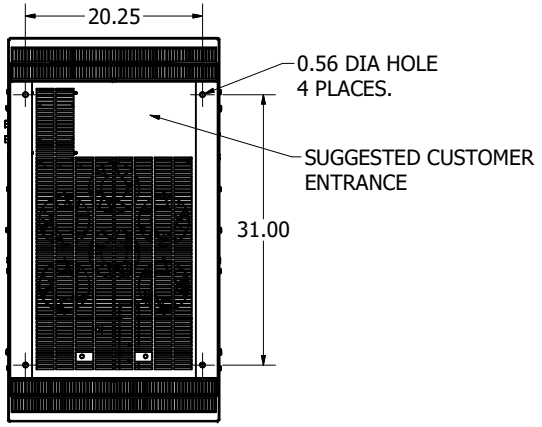

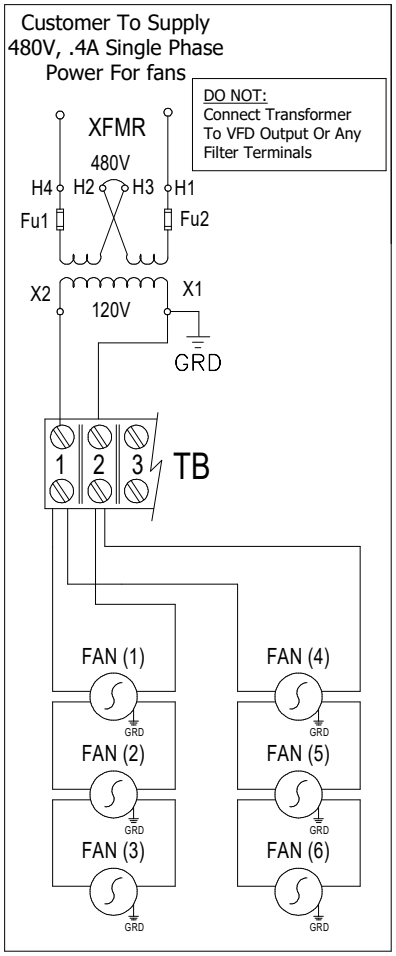

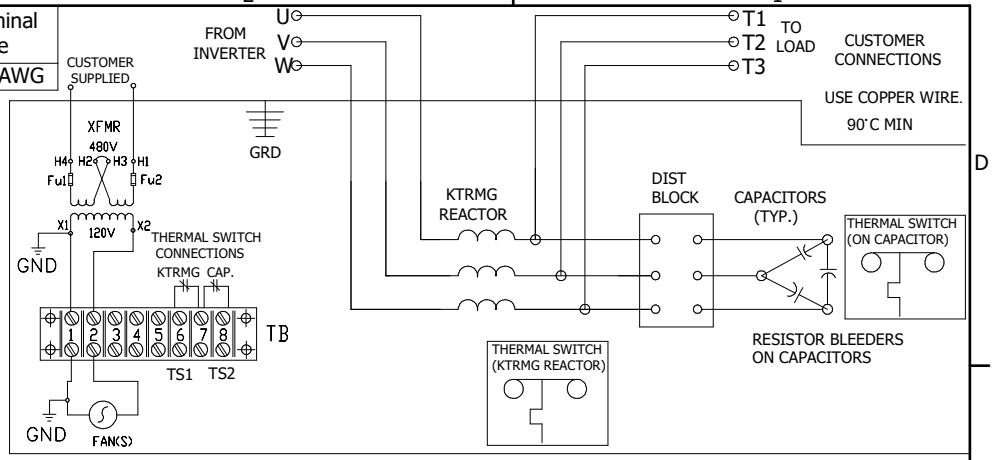

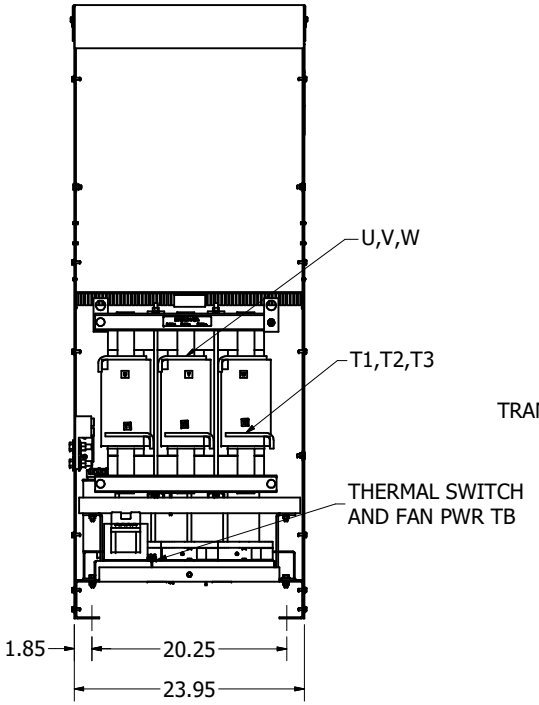

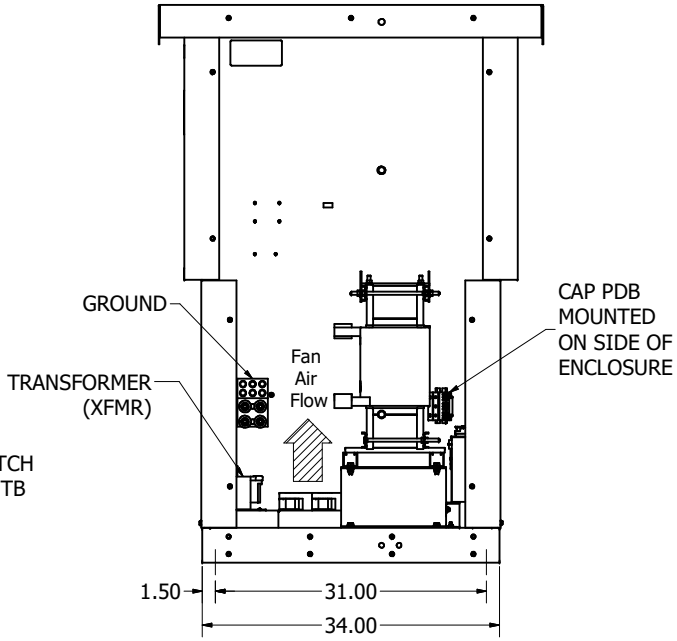

CUSTOMER IS RESPONSIBLE FOR INSTALLATION
TO MEET ALL NATIONAL AND LOCAL ELECTRICAL CODES.

THE INFORMATION AND DESIGNS CONTAINED IN THIS DRAWING ARE CONFIDENTIAL AND THE PROPRIETARY PROPERTY OF ALLIED MOTION TECHNOLOGIES INC. AND ITS SUBSIDIARIES. NEITHER THIS DESIGN NOR ANY INFORMATION CONTAINED IN THIS DRAWING MAY BE REPRODUCED OR DISCLOSED TO OTHERS WITHOUT THE EXPRESS WRITTEN CONSENT OF ALLIED MOTION TECHNOLOGIES INC. AND ITS SUBSIDIARIES.

NO	REVISION	DATE	BY
D	6143 Update To Fan Tray	01/17/23	JRN
C	Add Fans	05/26/17	DSW

TOLERANCES (EXCEPT AS NOTED)
DECIMAL .XX ± .25 .XXX ± .10
FRACTIONAL ± 1/32
ANGULAR ± 1°

TCI An Allied Motion Company
W132N10651 Grant Drive
Germantown, WI 53022
© 2023 TCI, LLC

MSN0600A300, MotorShield, Sinewave Filter
480/3/60, Type 1/3R

DRN. BY: DSW | DATE: 07/14/15 | 105800DG
SCALE: 1/10 | APRVD: | SIZE: C | SHT 1 OF 1