See V1K Installation Guide For
Terminal Wire Size And Torque Information.

V1K Part Number	Max Voltage	Amps	Phase	Weight (LBS)
V1K160A00*	600	160	3	45

* = (Blank) - No Thermal Switch
* = T - Thermal Switch Option

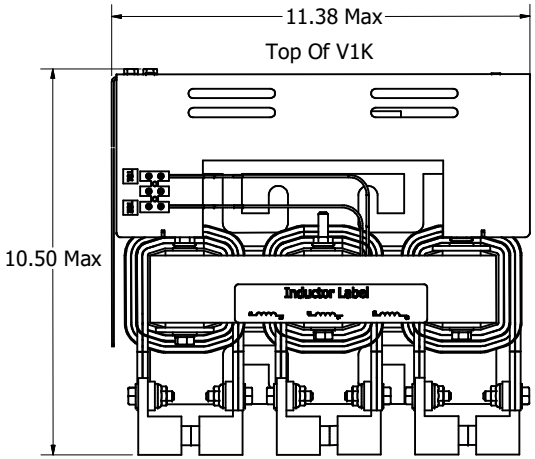

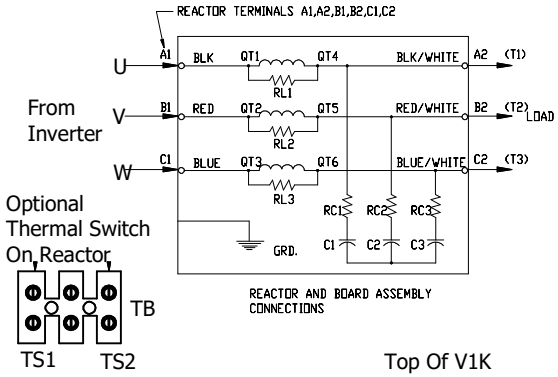

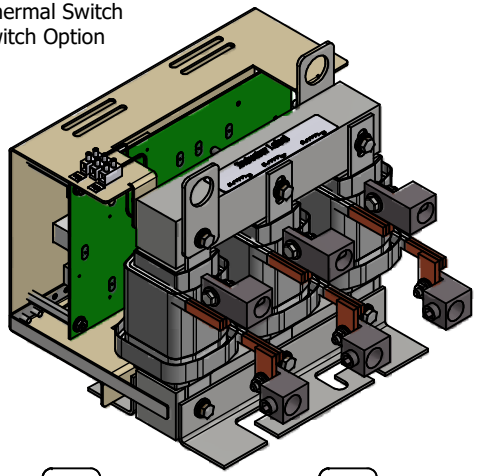

Optional Thermal Switch On Reactor

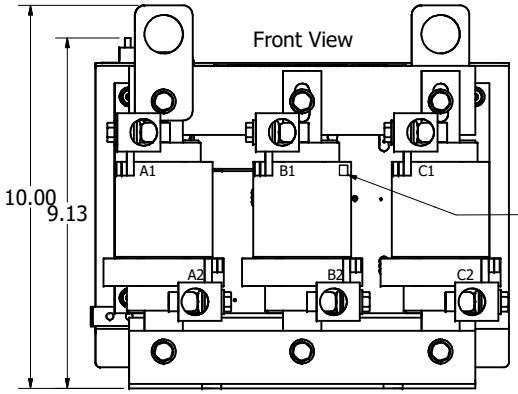

Optional Thermal Switch Must Be Against Core, Centered Leads Out Back, RTV In Place. Wire To Terminal Block.

(Customer Connections) Markings On Coil For Reference Only.

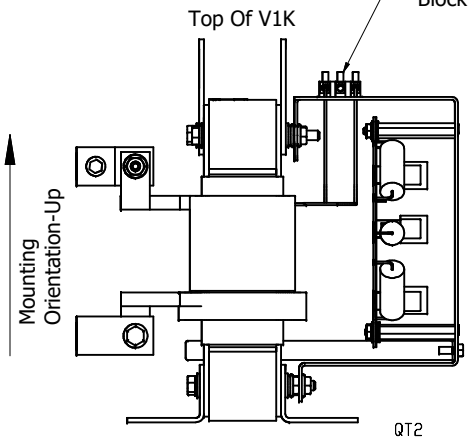

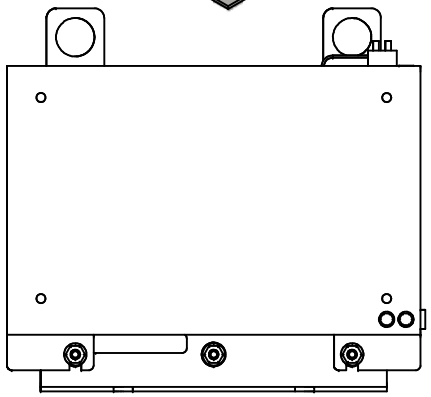

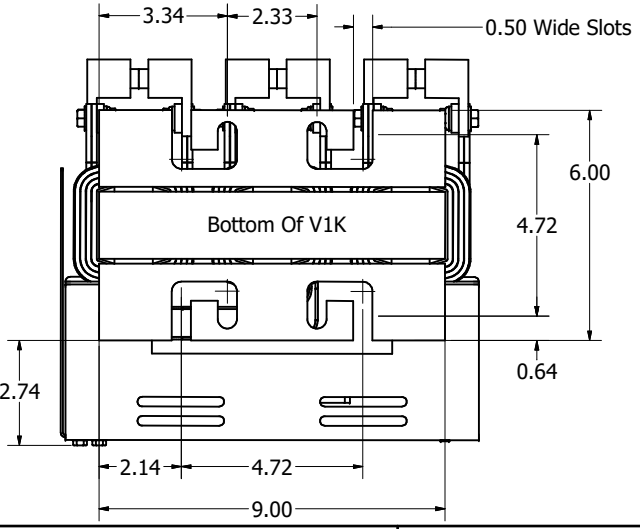

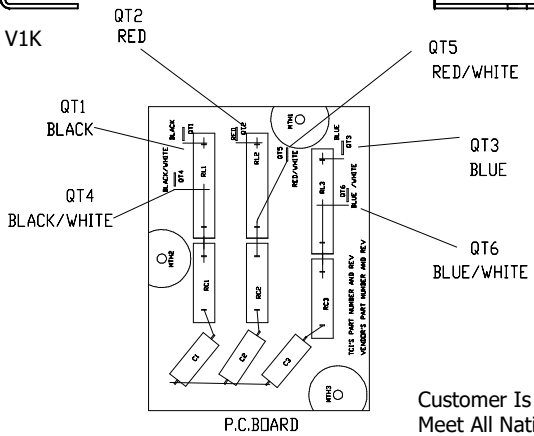

Customer Is Responsible For Installation to Meet All National And Local Electrical Codes.

Material(s) Shall be RoHS Compliant

DIMENSIONS IN INCHES (EXCEPT AS NOTED)	THE INFORMATION AND DESIGNS CONTAINED IN THIS DRAWING ARE CONFIDENTIAL AND THE PROPRIETARY PROPERTY OF ALLIENT INC. AND ITS SUBSIDIARIES. NEITHER THIS DESIGN NOR ANY INFORMATION CONTAINED IN THIS DRAWING MAY BE REPRODUCED OR DISCLOSED TO OTHERS WITHOUT THE EXPRESS WRITTEN CONSENT OF ALLIENT INC. AND ITS SUBSIDIARIES.	NO	ECO	REVISION	DATE	BY
TOLERANCES (EXCEPT AS NOTED) DECIMAL .XX ± .25 .XXX ± .10 FRACTIONAL ± 1/32 ANGULAR ± 1°		J	7418-1	Terminal Change/ Drawing Change	03/04/26	DSW

DRN. BY: DSW
DATE: 4/26/17

Allient Power
W132N10611 Grant Drive
Germantown, WI 53022
© 2026 Allient Inc.

V1K Open, 160A
V1K Open

SCALE: 1/2
DRN. NO. 102652-1DG
SIZE C
SHT.1 OF 1