HP	CATALOG NO	RATED AMPS(A)	MAX. AMPS(A)	APPROX WT-LBS
350	KDRX42TT	270.6	336	283

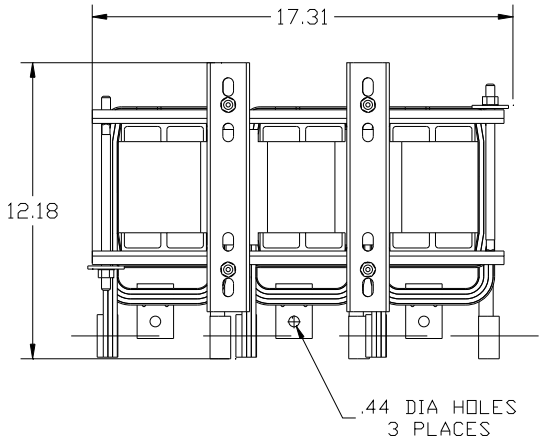

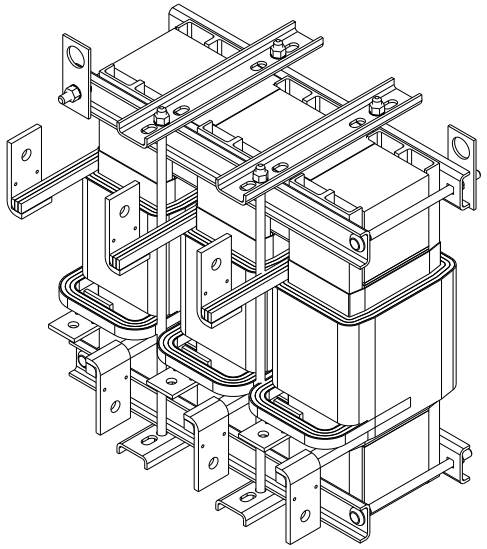

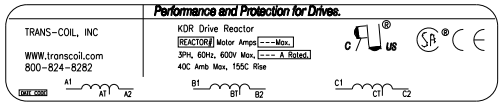

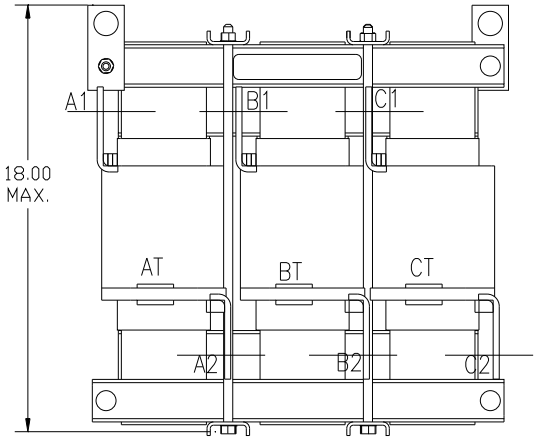

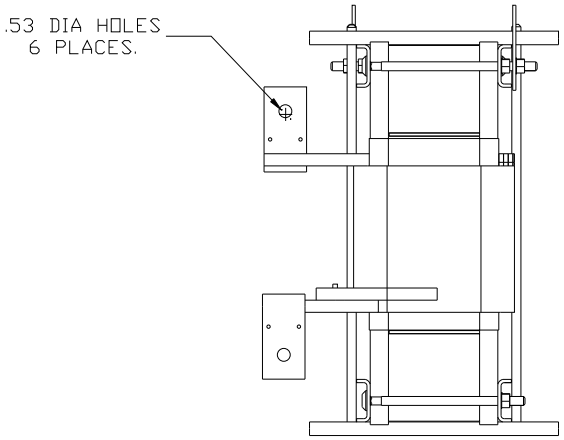

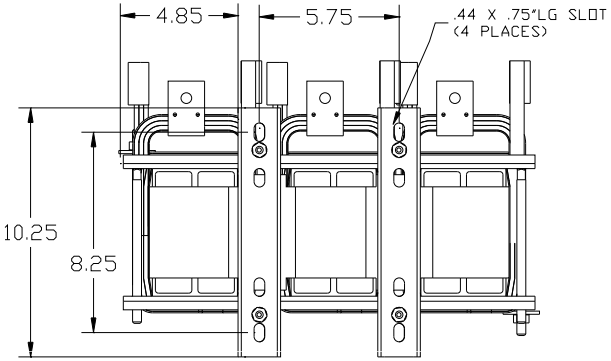

TCI, LLC CLAIMS PROPRIETARY RIGHTS IN THE MATERIAL HEREIN DISCLOSED. IT IS SUPPLIED WITHOUT PREJUDICE TO ANY PATENT RIGHTS OF TCI AND MAY NOT BE REPRODUCED OR USED TO MANUFACTURE ANYTHING SHOWN THEREIN WITHOUT WRITTEN PERMISSION FROM TCI.

NO	REVISION	DATE	BY
A	3169 TAP CHANGE	8/27/14	DSW

TOLERANCES (EXCEPT AS NOTED)
DECIMAL .XX ±.03 .XXX±.01
FRACTIONAL ± 1/32
ANGULAR ± 1/2°

TCI® W132 N10611 Grant Drive
Germantown, WI 53022

KDRX42TT
350HP, 600V HGP REACTOR

DRN. BY DSW | DATE 6/6/14 | DWG NO. 105675DG
SCALE TO FIT | SIZE C | SHT. 1 OF 1