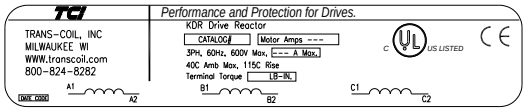

LABEL PLACED ON INSIDE WALL OF CABINET.

CATALOG NO	VOLTAGE	NEC MOTOR HP	NEC MOTOR CURRENT	WATTS LOSS	APPROX. WEIGHT-LBS
KDRULF26LE01	208/240	50	143	154	67

NEC MOTOR CURRENTS SHOWN IN THE 208/240 VOLT CHART ARE BASED ON HORSEPOWER AT 208 VOLT. 575/600 VOLT CHART USE THE 575 VOLT CURRENT RATING.

LUG WIRE RANGE FOR REACTOR.	250MCM-6, AL OR CU.
TIGHTENING TORQUE.	275 LB-IN

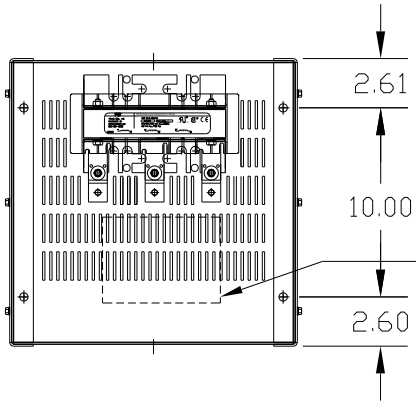

RECOMMENDED CONDUIT ENTRANCE AREA - LEFT FRONT SIDE, BOTTOM FRONT. RIGHT FRONT SIDE AND TOP.

LABEL PLACED ON FRONT OF CABINET.

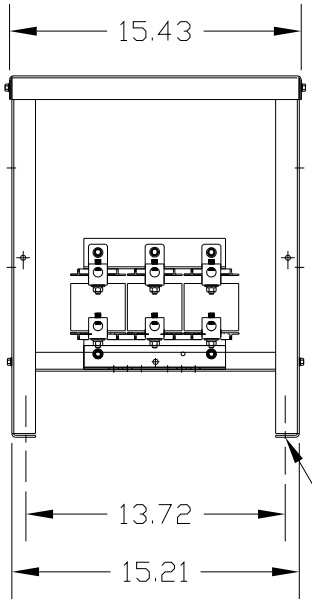

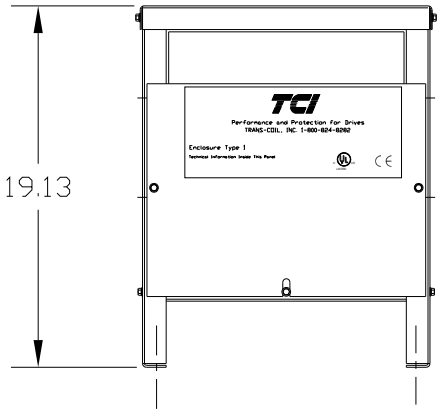

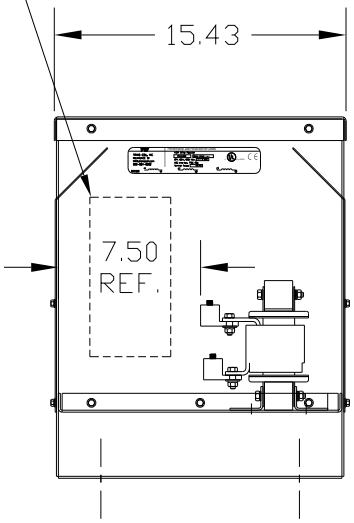

.44 DIA MOUNTING HOLES 4 PLACES.

CUSTOMER IS RESPONSIBLE FOR INSTALLATION TO MEET ALL LOCAL AND NATIONAL CODES

VENDOR LILLY POWDER COATINGS, INC.
PRODUCT CODE 312E
COLOR PEBBLE GRAY
POWDER TYPE POLYESTER POLYURETHANE

PAINT SUITABLE FOR OUTDOOR APPLICATION PER UL TYPE 3R AND APPLIED PER A UL ACCEPTED DTVV2 COATING PROGRAM.

NO	REVISION	DATE	BY

TOLERANCES (EXCEPT AS NOTED)
DECIMAL .XX ±.03 .XXX± .01
FRACTIONAL ± 1/32
ANGULAR ± 1/2°

TCI 7878 N. 86th STREET MILWAUKEE, WI 53224

KDR FRAME F (ILSCO LUGS) TYPE 1 ENCLOSURE (MEDIUM)

DRN. BY DSW | DATE 06/21/04 | DWG. NO. B KDRULENCL-16DG
SCALE TO FIT | APRVD. | SHT. 1 OF1