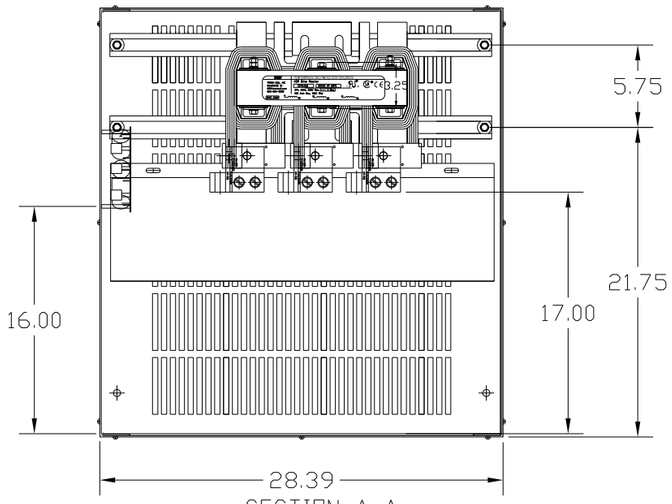

SECTION A-A

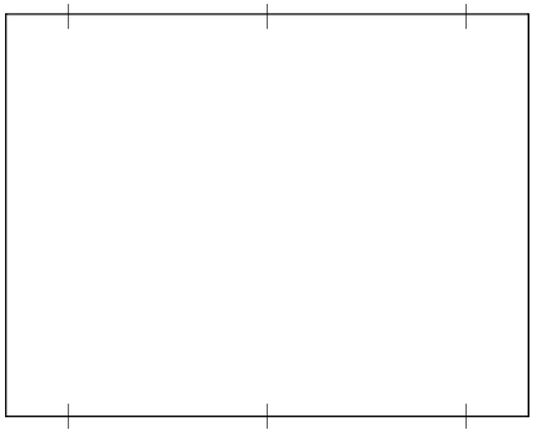

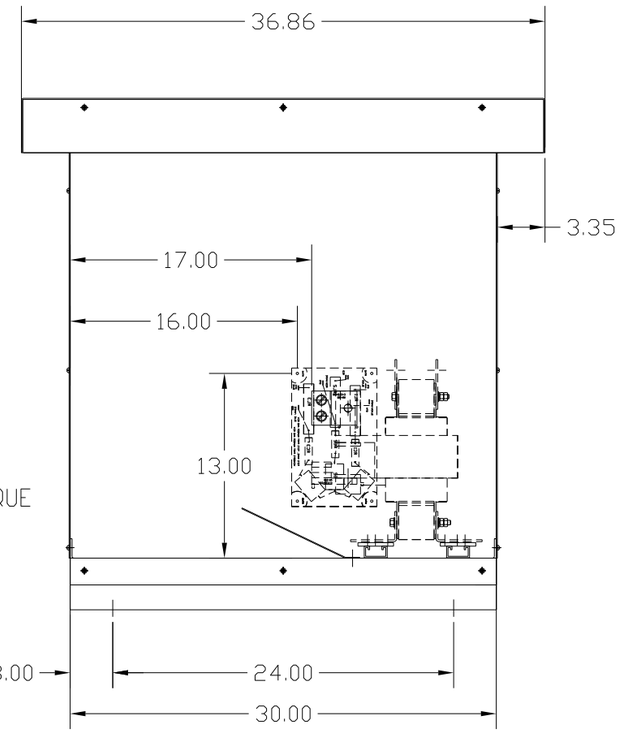

SPECIFICATIONS:	
AMP.	600
VOLT	240-600
PHASE	3
HZ	60
WEIGHT, LBS.	297
ENCLOSURE	ENCLOSED, 3R
ENCL., COLOR	PEBBLE GRAY

FINISH:
VENDOR - LILLY POWDER COATINGS, INC.
PRODUCT CODE - 312E
COLOR - PEBBLE GRAY
POWDER TYPE - POLYESTER-POLYURETHANE
PAINT SUITABLE FOR OUTDOOR APPLICATION PER UL TYPE 3R
AND APPLIED PER A UL ACCEPTED DTVV2 COATING PROGRAM.

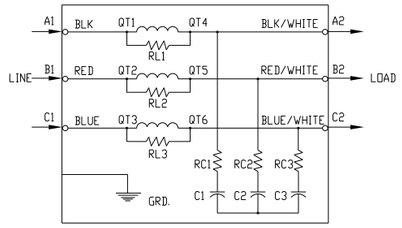

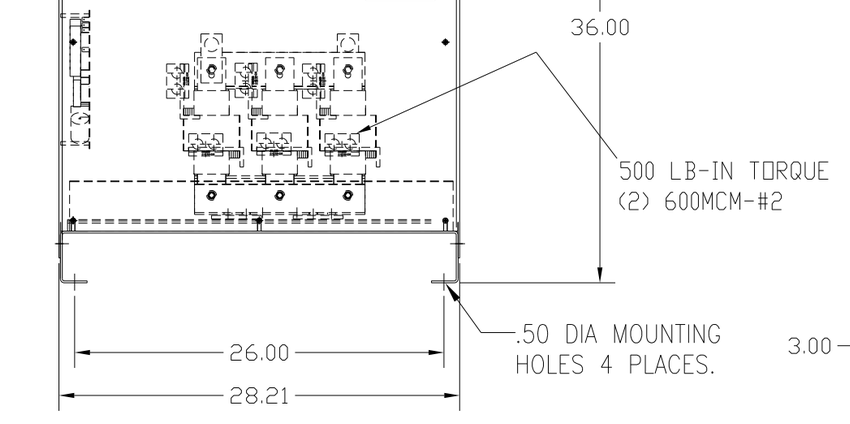

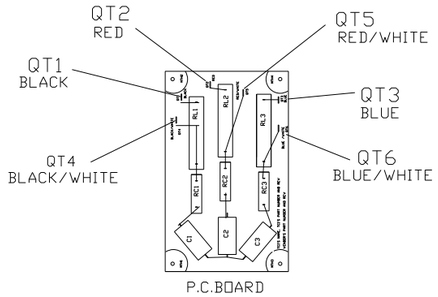

P.C.BOARD
VIEW A-A

CUSTOMER IS RESPONSIBLE FOR INSTALLATION TO
MEET ALL NATIONAL AND LOCAL ELECTRICAL CODES.

NO	REVISION	DATE	BY

TOLERANCES (EXCEPT AS NOTED)
DECIMAL .XX ±.02 .XXX±.01
FRACTIONAL ±1/32
ANGULAR ±1/2°

TCI
7878 N. 86th STREET
MILWAUKEE, WI 53224

V1K600A03 OUTPUT FILTER
600 AMP,480/3/60, ENCL.,3R

DRN. BY RJC | DATE 5/20/10 | DWG. NO. B 104239DG
SCALE -- | APRVD. | SHT. 1 OF 1