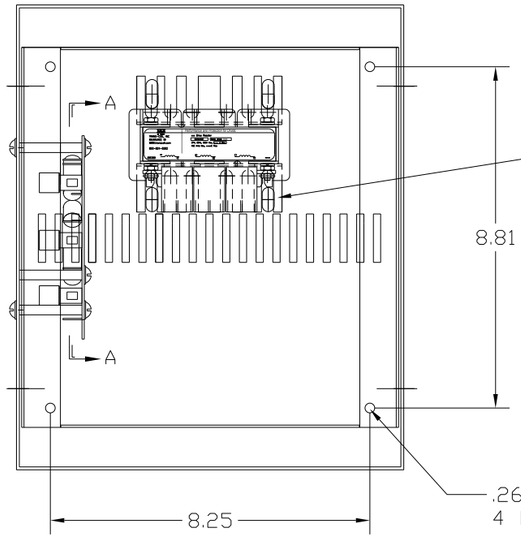

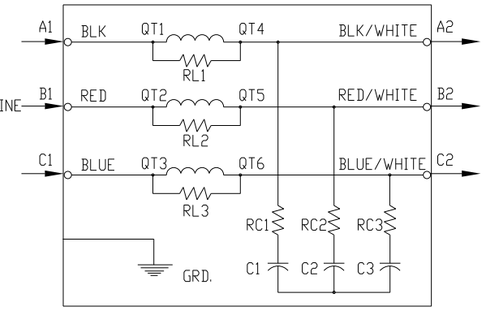

TERMINAL BLOCK SPECIFICATIONS:
600 V.
20 AMP
22-12 AWG
TORQUE 10 IN-LBS

SPECIFICATIONS:	
AMP.	2
VOLT	240-600
PHASE	3
HZ	60
WEIGHT, LBS.	25
ENCLOSURE	ENCLOSED, 3R
ENCL., COLOR	PEBBLE GRAY

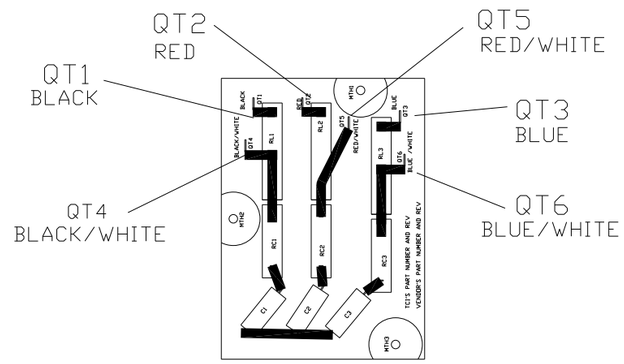

P.C.BOARD
VIEW A-A

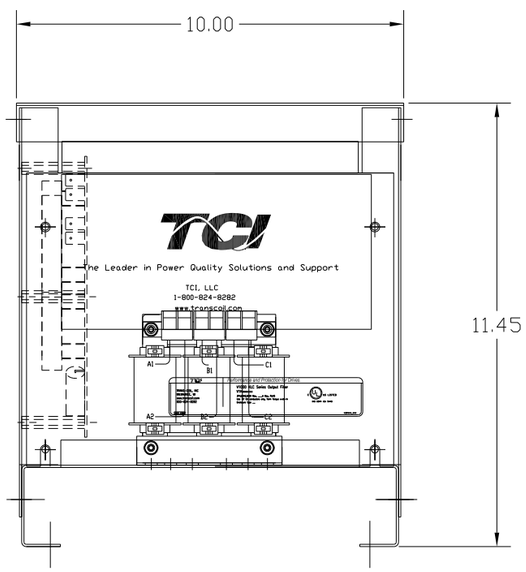

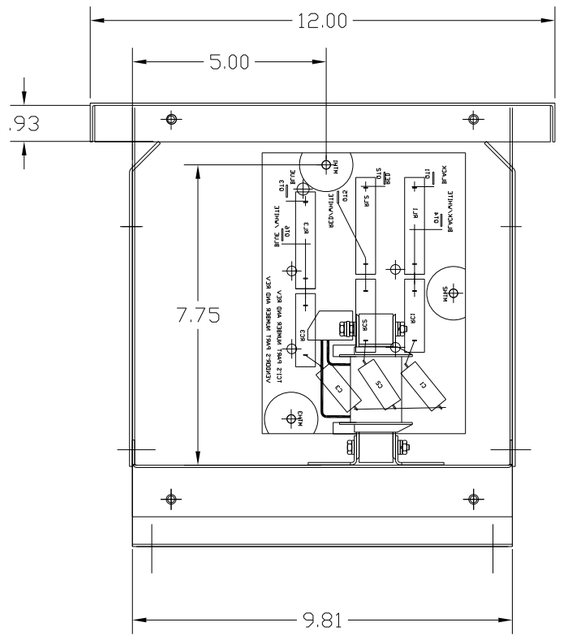

FINISH:
VENDOR - LILLY POWDER COATINGS, INC.
PRODUCT CODE - 312E
COLOR - PEBBLE GRAY
POWDER TYPE - POLYESTER-POLYURETHANE

PAINT SUITABLE FOR OUTDOOR APPLICATION PER UL TYPE 3R AND APPLIED PER A UL ACCEPTED DTVV2 COATING PROGRAM.

CUSTOMER IS RESPONSIBLE FOR INSTALLATION TO MEET ALL NATIONAL AND LOCAL ELECTRICAL CODES.

NO	REVISION	DATE	BY

TOLERANCES (EXCEPT AS NOTED)
DECIMAL
.XX ± .02
.XXX ± .01
FRACTIONAL
± 1/32
ANGULAR
± 1/2°

TCI
7878 N. 86th STREET
MILWAUKEE, WI 53224

V1K2A03 OUTPUT FILTER
2 AMP, 480/3/60, ENCL., 3R

DRN. BY	DATE	DWG. NO.
RJC	5/20/10	B 104215DG
SCALE --	APRVD.	SHT. 1 OF 1