SPECIFICATIONS:	
AMP.	80
VOLT	240-600
PHASE	3
HZ	60
WEIGHT, LBS.	62
ENCLOSURE	ENCLOSED, 3R
ENCL., COLOR	PEBBLE GRAY

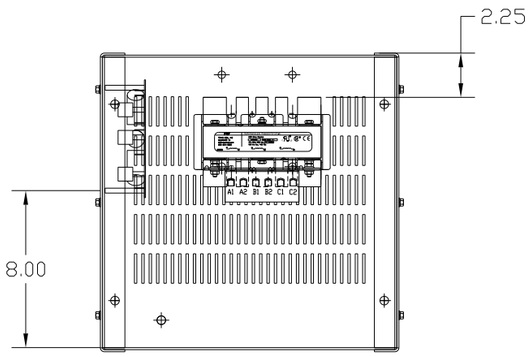

SECTION A-A

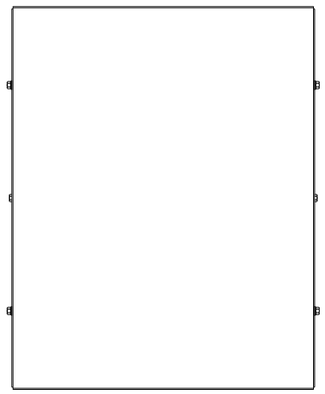

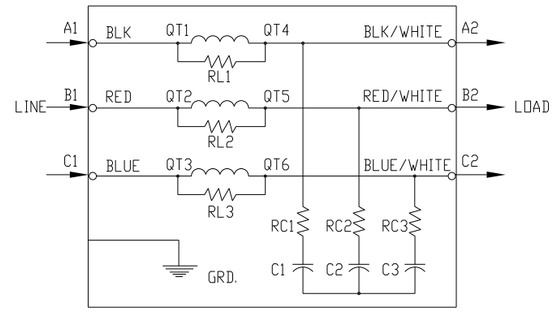

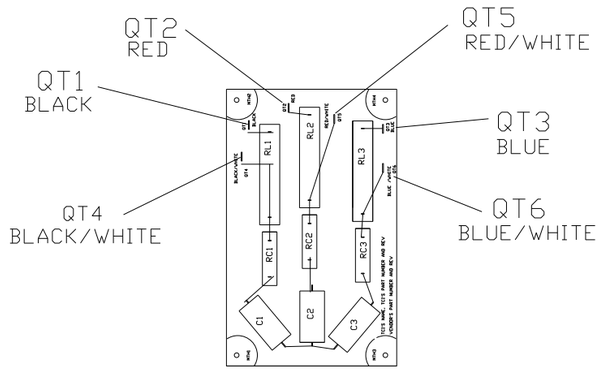

P.C.BOARD
VIEW A-A

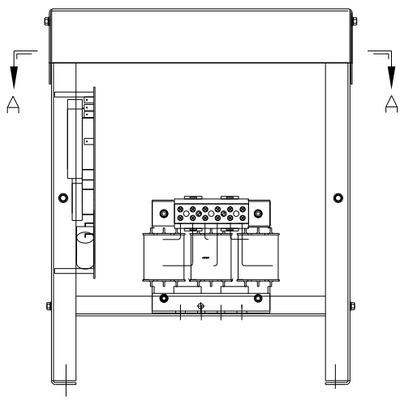

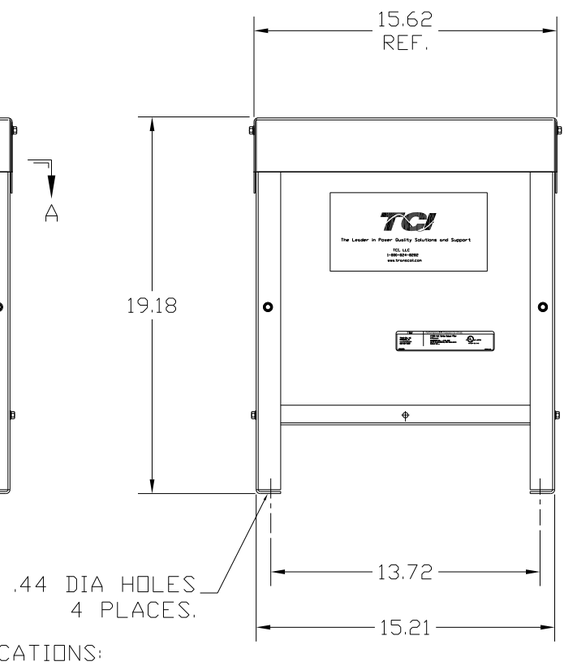

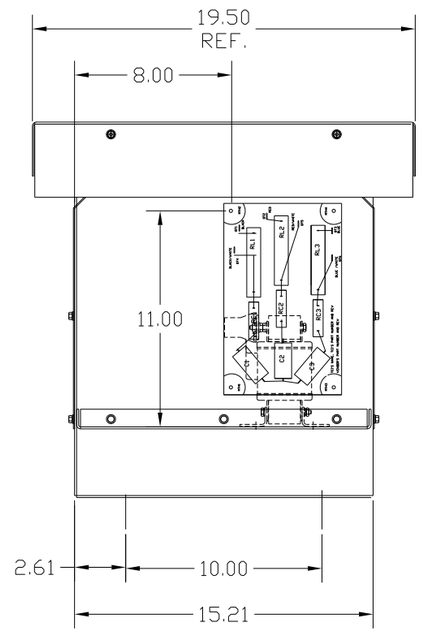

FINISH:
VENDOR - LILLY POWDER COATINGS, INC.
PRODUCT CODE - 312E
COLOR - PEBBLE GRAY
POWDER TYPE - POLYESTER-POLYURETHANE

PAINT SUITABLE FOR OUTDOOR APPLICATION PER UL TYPE 3R AND APPLIED PER A UL ACCEPTED DTVV2 COATING PROGRAM.

CUSTOMER IS RESPONSIBLE FOR INSTALLATION TO MEET ALL NATIONAL AND LOCAL ELECTRICAL CODES.

TERMINAL BLOCK SPECIFICATIONS:
600 V.
85 AMP. COPPER
50 AMP. ALUM.
WIRE RANGE
1 AWG (7&19 STRAND ONLY)
2 AWG TO 22 AWG.

TORQUE 35 LB-IN #1-#4 AWG
30 LB-IN #6-#14 AWG
25 LB-IN #16-#22 AWG

NO	REVISION	DATE	BY

TOLERANCES (EXCEPT AS NOTED)
DECIMAL .XX ±.02 .XXX±.01
FRACTIONAL ±1/32
ANGULAR ±1/2°

TCI 7878 N. 86th STREET MILWAUKEE, WI 53224

V1K80A03EX OUTPUT FILTER
80 AMP, 480/3/60, ENCL.,3R

DRN. BY RJC	DATE 6/19/10	DWG. NO. B 104255DG
SCALE --	APRVD.	SHT. 1 OF 1