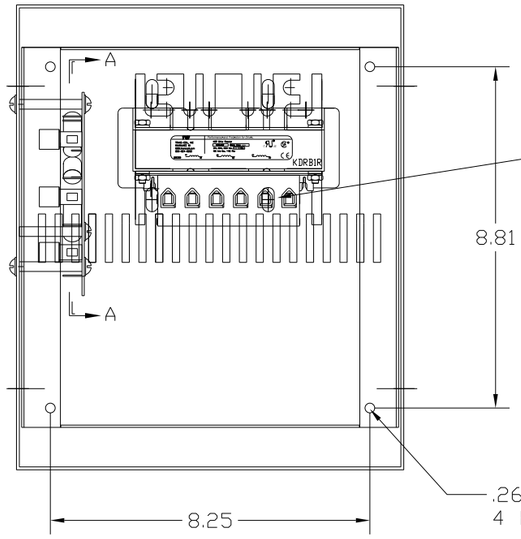

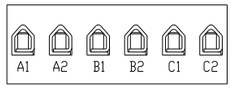

TERMINAL BLOCK SPECIFICATIONS:
600 V.
85 AMP
18-4 AWG
TORQUE 20 IN-LBS

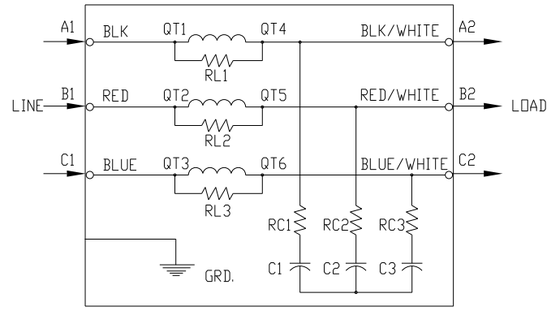

SPECIFICATIONS:	
AMP.	21
VOLT	240-600
PHASE	3
HZ	60
WEIGHT, LBS.	29
ENCLOSURE	ENCLOSED, 3R
ENCL., COLOR	PEBBLE GRAY

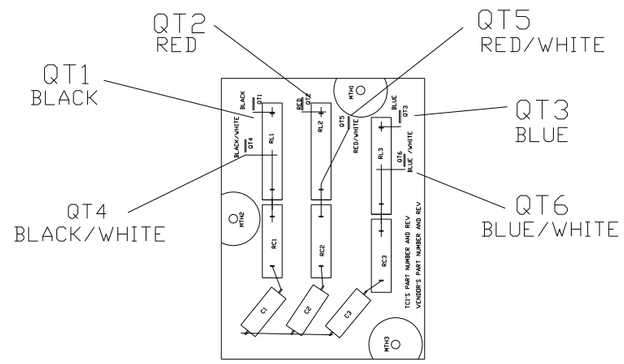

P.C.BOARD
VIEW A-A

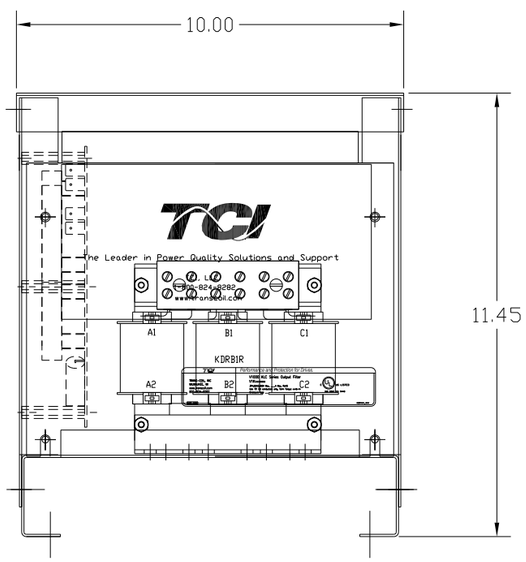

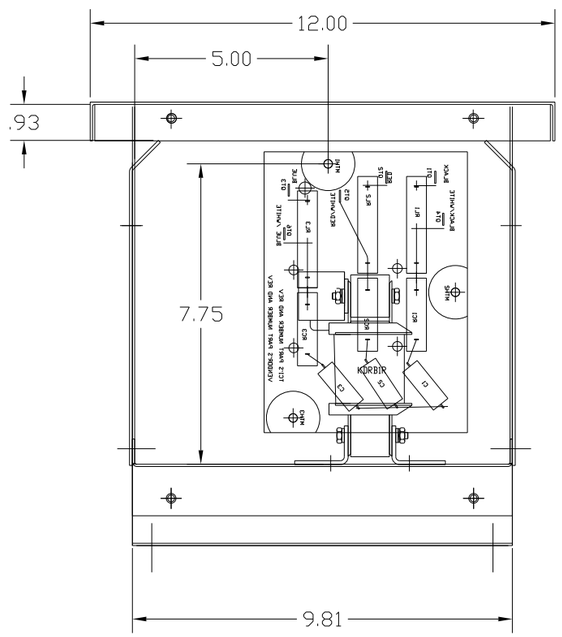

FINISH:
VENDOR - LILLY POWDER COATINGS, INC.
PRODUCT CODE - 312E
COLOR - PEBBLE GRAY
POWDER TYPE - POLYESTER-POLYURETHANE

PAINT SUITABLE FOR OUTDOOR APPLICATION PER UL TYPE 3R
AND APPLIED PER A UL ACCEPTED DTVV2 COATING PROGRAM.

CUSTOMER IS RESPONSIBLE FOR INSTALLATION TO
MEET ALL NATIONAL AND LOCAL ELECTRICAL CODES.

NO	REVISION	DATE	BY

TOLERANCES (EXCEPT AS NOTED)
DECIMAL .XX ±.02 .XXX± .01
FRACTIONAL ± 1/32
ANGULAR ± 1/2°

TCI
7878 N. 86th STREET
MILWAUKEE, WI 53224

V1K21A03EX OUTPUT FILTER
21 AMP, 480/3/60, ENCL.,3R

DRN. BY	DATE	DWG. NO.
RJC	5/20/10	B 104249DG
SCALE --	APRVD.	SHT. 1 OF 1