GENERAL PURPOSE, 1/3R, COLOR: WHITE.

209 LBS : APPROX WEIGHT.

GROUND LUG
WIRE RANGE: 1/0-14 AWG
TORQUE: 200 LB-IN

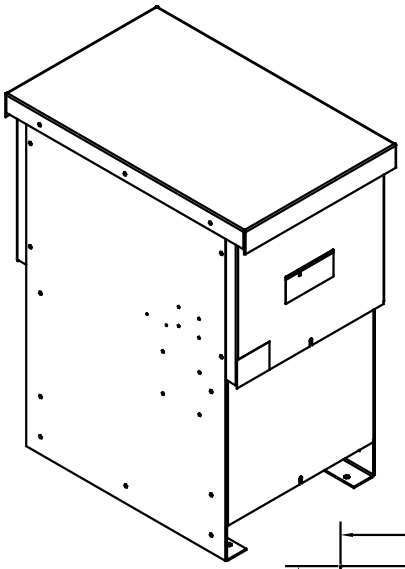

KMG HIGH PERFORMANCE OUTPUT FILTER

PART NUMBER: KMG55AG3R0000

FLA: 55 — DRAWING#: 103449DG

SYSTEM VOLTAGE: 480V — SCHEMATIC: 26886

HZ: 80

PHASE: 3 — ENCLOSURE TYPE: 1/3R

MOTORGUARD

CUSTOMER CONNECTIONS

T1 T2 T3

U V W

CUSTOMER WIRE ENTRANCE AND EXIT LOCATION.

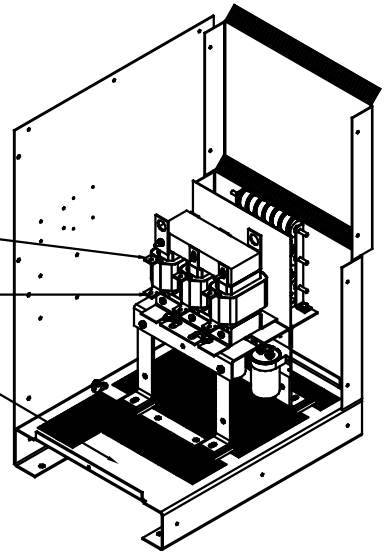

TCI MOTORGUARD

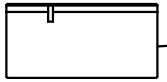

WARNING
WAIT TWO MINUTES AFTER POWER IS TURNED OFF BEFORE OPENING TO ALLOW FOR CAPACITOR DISCHARGE.

WARNING
DO NOT PLACE FLAMMABLE MATERIALS NEAR EXHAUST OPENINGS.

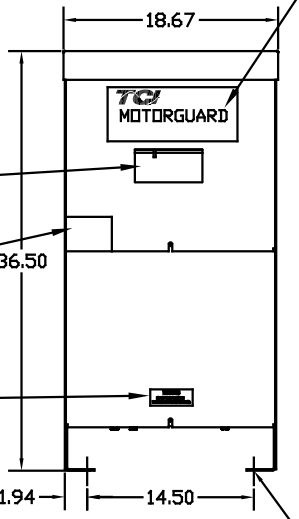

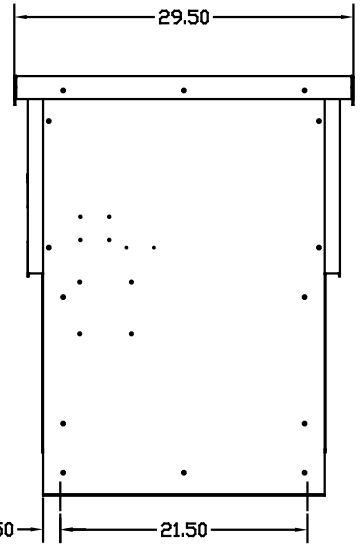

.56 DIA HOLES
4 PLACES.

DANGER
HIGH VOLTAGE

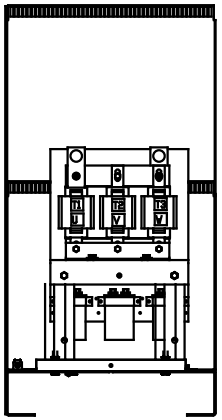

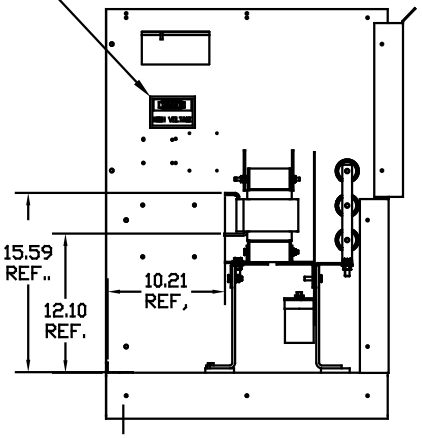

CUSTOMER IS RESPONSIBLE FOR INSTALLATION TO MEET ALL NATIONAL AND LOCAL ELECTRICAL CODES.

PART NUMBER: KMG55AG3R0000

FOR SCHEMATIC SEE DRAWING # 26886.

NO	REVISION	DATE	BY

TOLERANCES (EXCEPT AS NOTED)
DECIMAL .XX ±.03 .XXX± .01
FRACTIONAL ± 1/32
ANGULAR ± 1/2°

TCI 7878 N. 86th STREET MILWAUKEE, WI 53224

KMG, LRC FILTER STANDARD
55 AMP 480/3/80, 1/3R

DRW. BY DSW — DATE 11/25/08 — DWG. NO. C 103449DG
SCALE TO FIT — APRVD. — SHT. 1 OF 1