GENERAL PURPOSE, 1/3R, COLOR: WHITE.

APPROX WT: 630LBS

KMG HIGH PERFORMANCE OUTPUT FILTER

PART NUMBER: KMG362AG3R0000

FLA: 362 | DRAWING#: 103858DG

SYSTEM VOLTAGE: 480V | SCHEMATIC: 26736

HZ: 80

PHASE: 3 | ENCLOSURE TYPE: 1/3R

MOTORGUARD

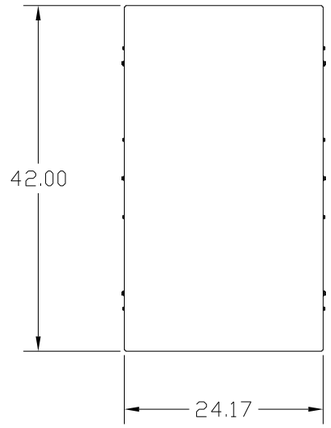

GROUND LUG
WIRE RANGE: TWO 350MCM-4
TORQUE: 275 LB-IN

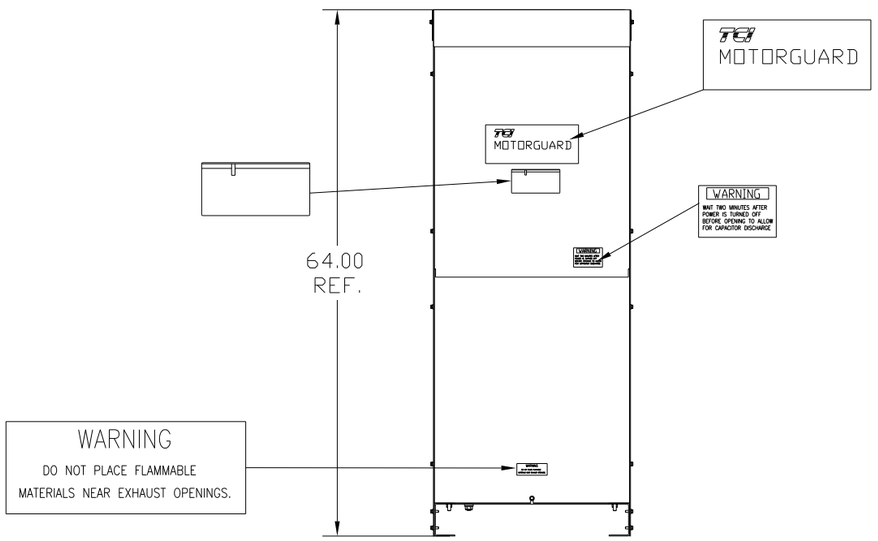

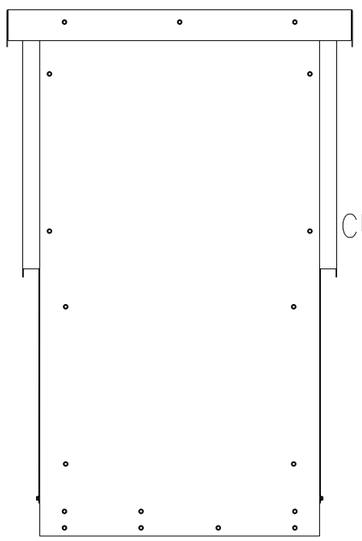

CUSTOMER CONNECTIONS
(.56 DIA HOLES 6 PLACES.)

T1 T2 T3

U V W

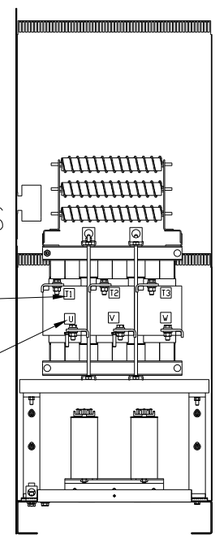

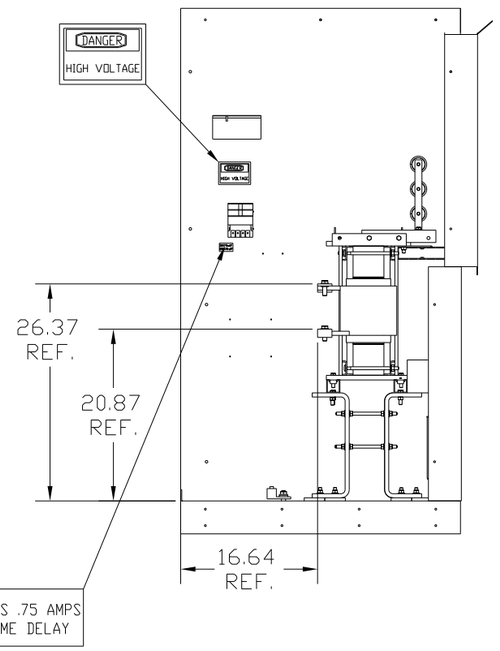

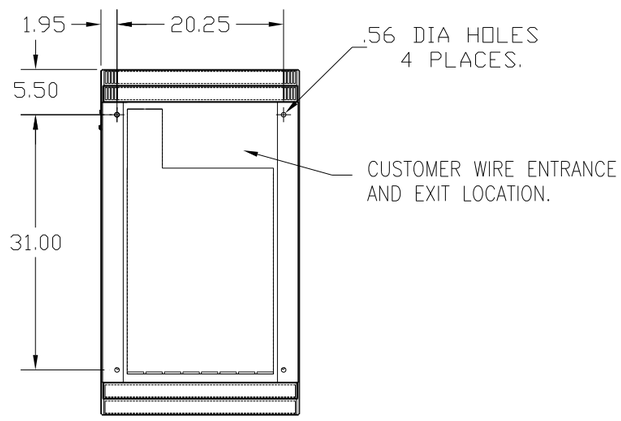

PART NUMBER: KMG362AG3R0000

FOR SCHEMATIC SEE DWG# 26736

CUSTOMER IS RESPONSIBLE FOR INSTALLATION
TO MEET ALL NATIONAL AND LOCAL ELECTRICAL CODES.

NO	REVISION	DATE	BY

TOLERANCES (EXCEPT AS NOTED)
DECIMAL .XX ±.50 .XXX±.25
FRACTIONAL ± 1/32
ANGULAR ± 1/2°

TCI 7878 N. 86th STREET MILWAUKEE, WI 53224

KMG, LRC FILTER, STANDARD 362AMP, 480/3/80, 1/3R

DRN. BY DSW | DATE 10/08/08 | DWG. NO. D 103858DG
SCALE TO FIT | APRVD. | SHT. 1 OF 1