GENERAL PURPOSE, 1/3R, COLOR: WHITE.

260 LBS : APPROX WEIGHT.

KMG HIGH PERFORMANCE OUTPUT FILTER

PART NUMBER: KMG200AG3R0000

FLA: 200 — DRAWING#: 103448DG

SYSTEM VOLTAGE: 480V — SCHEMATIC: 26736

HZ: 80

PHASE: 3 — ENCLOSURE TYPE: 1/3R

MOTORGUARD

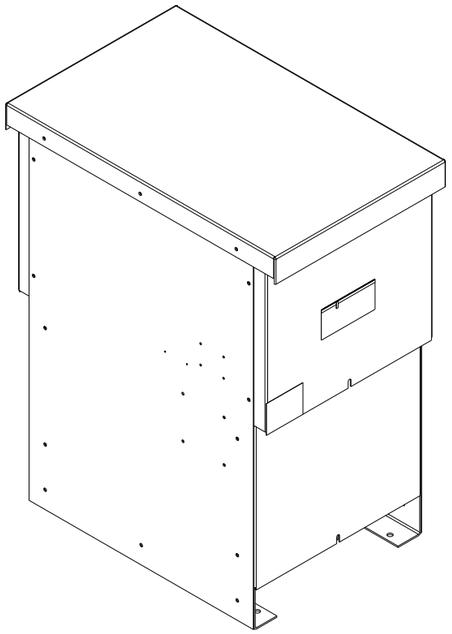

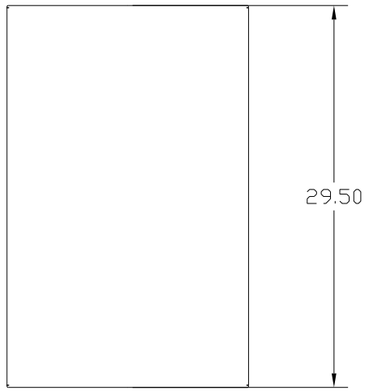

GROUND LUG
WIRE RANGE: 250MCM-#6 AWG
TORQUE: 275 LB-IN

CUSTOMER CONNECTIONS
(.38 DIA HOLES 6 PLACES.)

T1 T2 T3

U V W

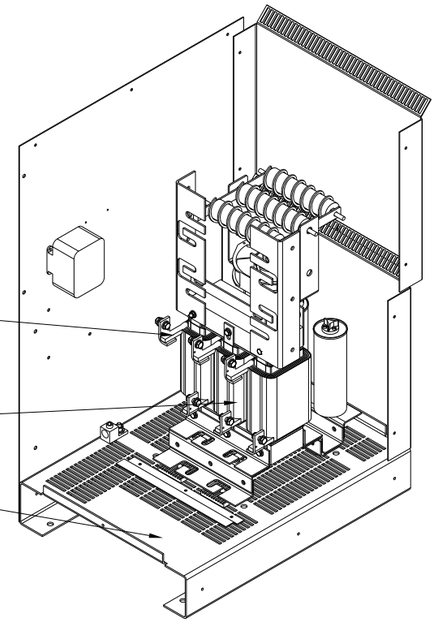

CUSTOMER WIRE ENTRANCE
AND EXIT LOCATION.

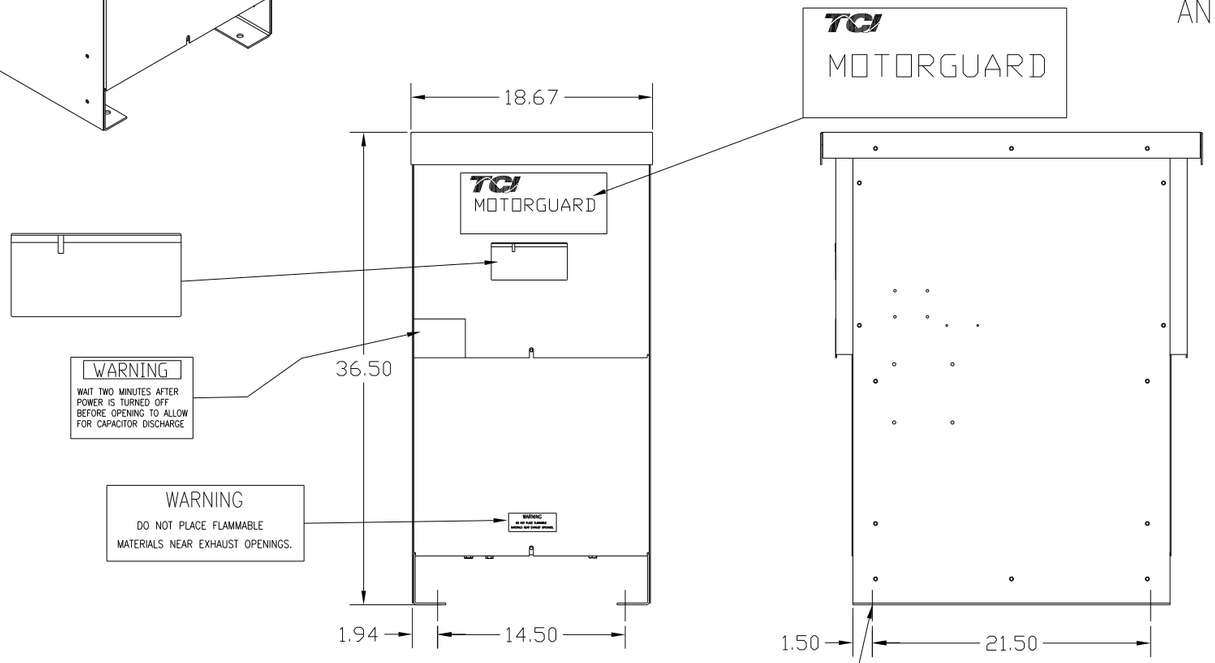

.56 DIA HOLES
4 PLACES.

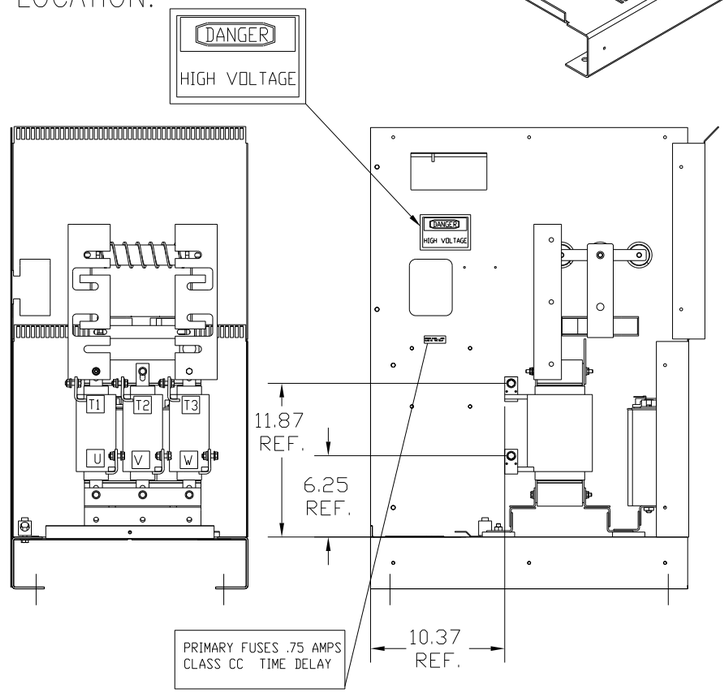

CUSTOMER IS RESPONSIBLE FOR INSTALLATION
TO MEET ALL NATIONAL AND LOCAL ELECTRICAL CODES.

PART NUMBER: KMG200AG3R0000

FOR SCHEMATIC SEE DRAWING # 26736.

NO	REVISION	DATE	BY
B	2605 REMOVE FAN BLK	4/20/09	DSW

TOLERANCES (EXCEPT AS NOTED)
DECIMAL .XX ±.03 .XXX±.01
FRACTIONAL ± 1/32
ANGULAR ± 1/2°

TCI 7878 N. 86th STREET MILWAUKEE, WI 53224

KMG, LRC FILTER STANDARD
200 AMP 480/3/80, 1/3R

DRN. BY DSW — DATE 12/23/08 — DWG. NO. C 103448DG
SCALE TO FIT — APRVD. — SHT. 1 OF 1