GENERAL PURPOSE, 1/3R, COLOR: GREY.

260 LBS : APPROX WEIGHT.

KMG HIGH PERFORMANCE OUTPUT FILTER

PART NUMBER: KMG200AG010000

FLA: 200 | DRAWING#: 103888DG

SYSTEM VOLTAGE: 480V | SCHEMATIC: 26736

HZ: 80

PHASE: 3 | ENCLOSURE TYPE: 1/3R

MOTORGUARD

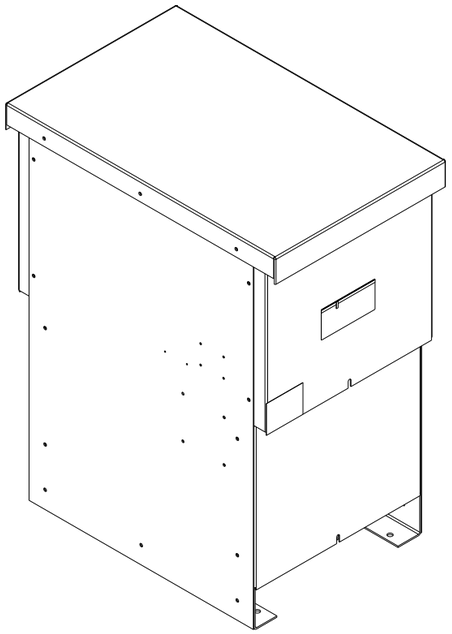

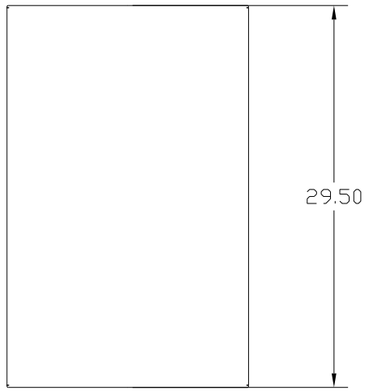

GROUND LUG
WIRE RANGE: 250MCM-#6 AWG
TORQUE: 275 LB-IN

CUSTOMER CONNECTIONS
(.38 DIA HOLES 6 PLACES.)

T1 T2 T3

U V W

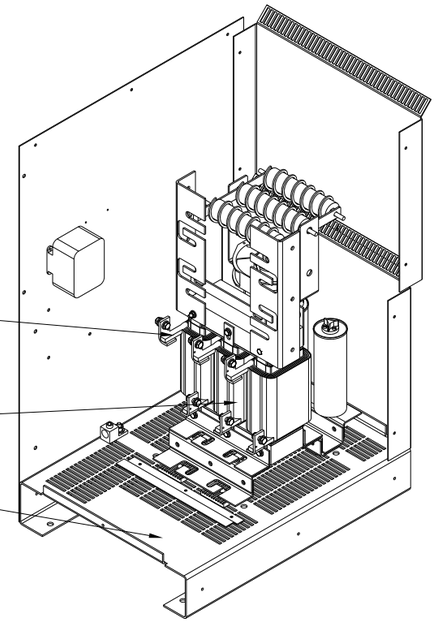

CUSTOMER WIRE ENTRANCE
AND EXIT LOCATION.

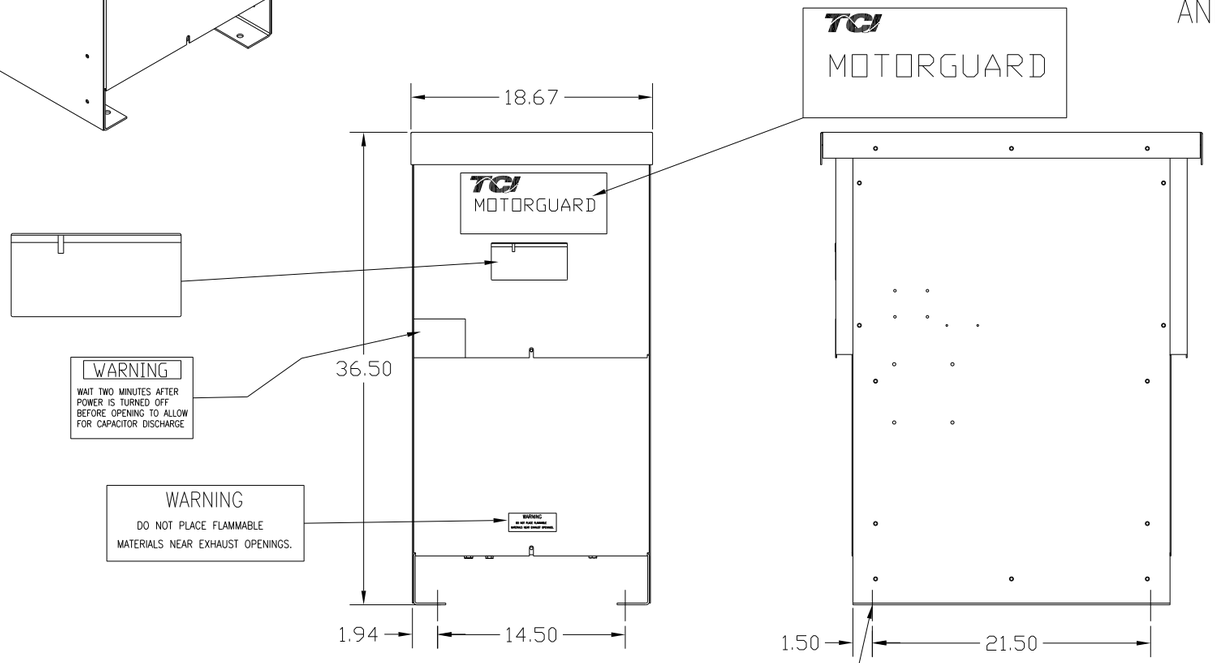

.56 DIA HOLES
4 PLACES.

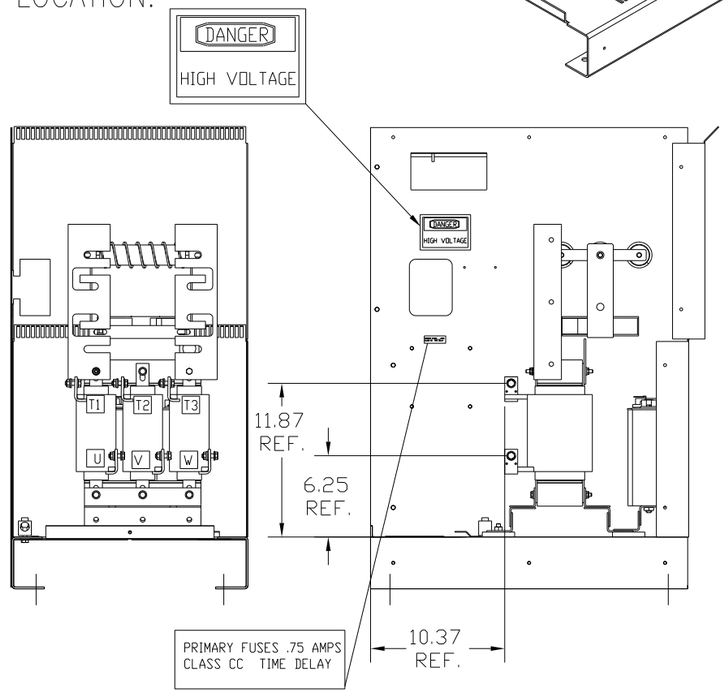

CUSTOMER IS RESPONSIBLE FOR INSTALLATION
TO MEET ALL NATIONAL AND LOCAL ELECTRICAL CODES.

PART NUMBER: KMG200AG010000

FOR SCHEMATIC SEE DRAWING # 26736.

NO	REVISION	DATE	BY

TOLERANCES (EXCEPT AS NOTED)
DECIMAL .XX ±.03 .XXX±.01
FRACTIONAL ± 1/32
ANGULAR ± 1/2°

TCI 7878 N. 86th STREET MILWAUKEE, WI 53224

KMG, LRC FILTER STANDARD
200 AMP 480/3/80, 1/3R

DRN. BY DSW | DATE 12/23/08 | DWG. NO. C 103888DG
SCALE TO FIT | APRVD. | SHT. 1 OF 1