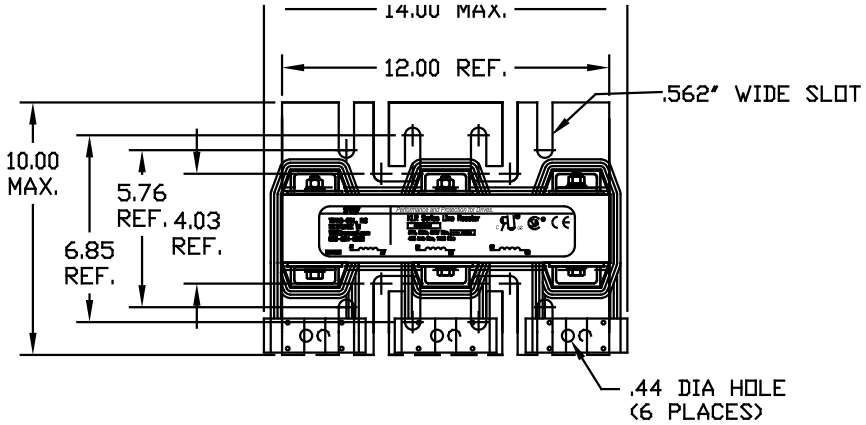

CATALOG NO	VOLTS(V.)	__mH±10%	__AMPS(A)	APPROX WT-LBS
KLR250CCB	24.0	.147	250	115
KLR250ECB	28.75	.176	250	115

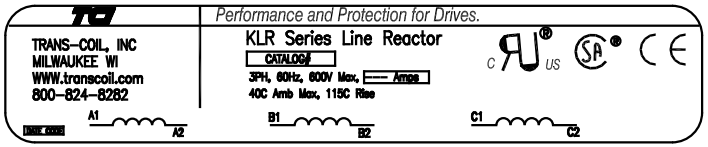

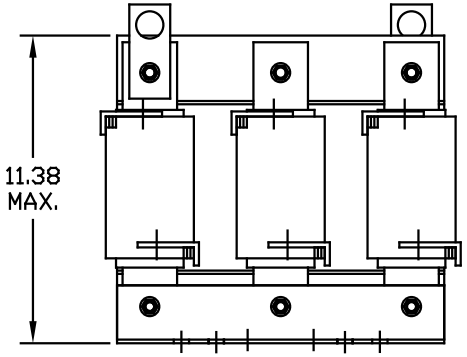

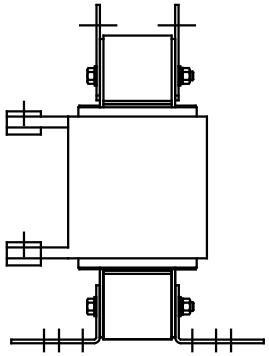

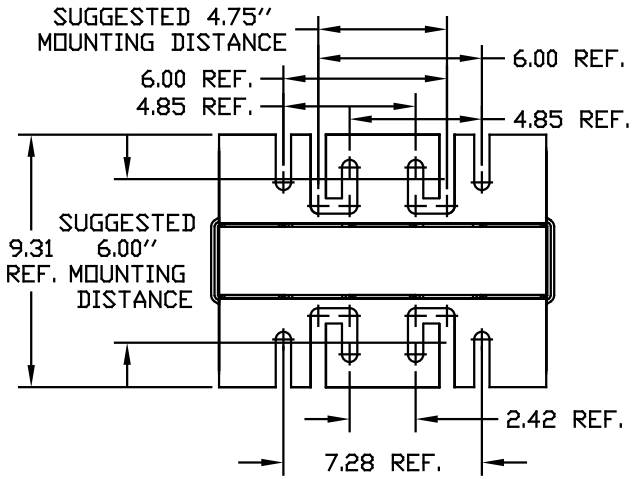

NO	REVISION	DATE	BY
B	2235, MOUNTING CHG	06/04/03	DSW

TOLERANCES (EXCEPT AS NOTED)
DECIMAL .XX ±.03 .XXX±.01
FRACTIONAL ±1/32
ANGULAR ±1/2°

TCI 7878 N. 86th STREET MILWAUKEE, WI 53224

SINE-GUARD REACTOR
KLR CB'S (FRAME L)

DRN. BY BW | DATE 04/02/98 | DWG. NO. C KLR-34DG
SCALE TO FIT | APRVD. | SHT. 1 OF 1