CATALOG NO.	KLCUL300A3R3
VOLTS	480
AMPS	300
KLR PART NO.	KLR300BCB
KLR BOARD NO.	24492
APPROX. WT.-LBS	120
REACTOR LUG WIRE RANGE	ONE 600MCM-4 TWO 250MCM-1/0, AL. OR CU.
TIGHTENING TORQUE.	500 LB-IN

LABEL DATA → CATALOG NO.

LABEL DATA → AMPS

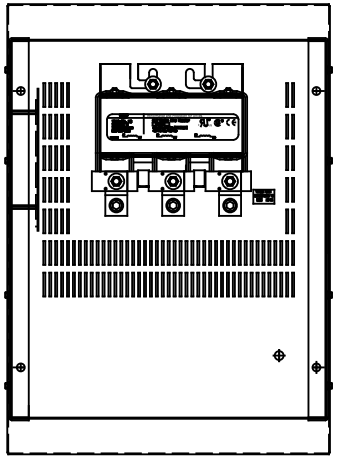

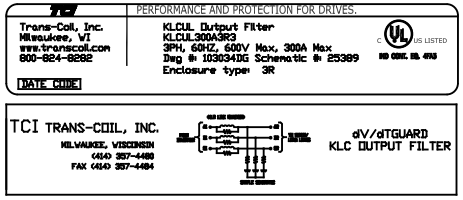

LABELS PLACED ON INSIDE WALL OF CABINET.

PERFORMANCE AND PROTECTION FOR DRIVES.
TRANS-COIL, INC.
1-800-824-8282

WIRING DIAGRAM

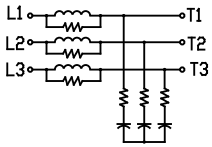

NOTE: INSTALLATION GUIDE MUST BE SHIPPED WITH EACH UNIT.

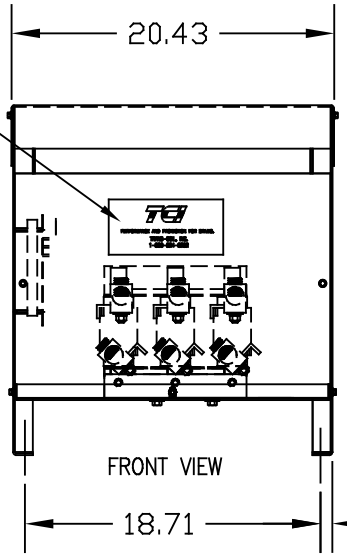

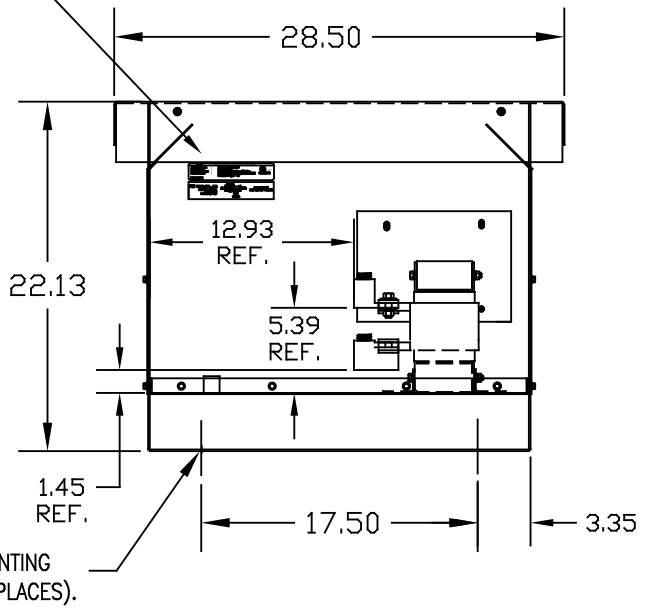

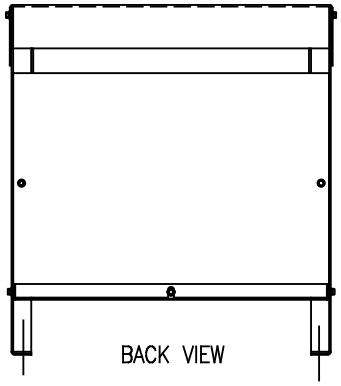

NOTE: CABINET FINISH: COLOR, BEIGE.

CUSTOMER IS RESPONSIBLE FOR INSTALLATION TO MEET ALL NATIONAL AND LOCAL ELECTRICAL CODES

NO	REVISION	DATE	BY

TOLERANCES (EXCEPT AS NOTED)
DECIMAL .XX ±.03 .XXX±.01
FRACTIONAL ± 1/32
ANGULAR ± 1/2°

TCI 7878 N. 86th STREET MILWAUKEE, WI 53224

KLCUL ENCLOSED OUTPUT FILTER, 480V KLCUL300A3R3

DRN. BY DSW | DATE 10/12/06 | DWG. NO. B 103034DG
SCALE 1/8"=1" | APRVD. | SHT. 1 OF 1