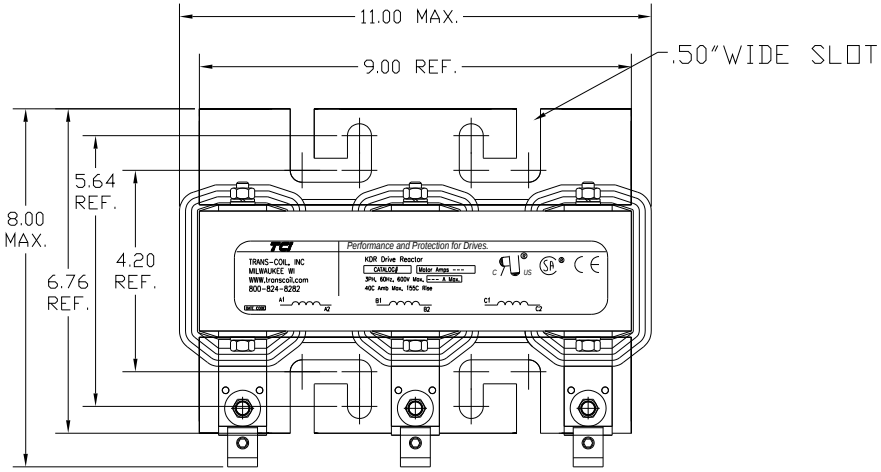

CATALOG NO	VOLTAGE	NEC MOTOR HP	NEC MOTOR CURRENT	WATTS LOSS	APPROX. WEIGHT-LBS
KDRULG44H	575/600	125	125	381	68

NOTE 1: WATTS LOSS WILL VARY DUE TO FUNDAMENTAL FREQUENCY, CARRIER FREQUENCY AND OTHER SYSTEM CHARACTERISTICS.

KDR DRIVE REACTORS COMPLY WITH THE THERMAL AND ALTITUDE STANDARDS SET FORTH BY NEMA ST20-1992..

NEC MOTOR CURRENTS SHOWN IN THE 208/240 VOLT CHART ARE BASED ON HORSEPOWER AT 208 VOLT. 575/600 VOLT CHART USE THE 575 VOLT CURRENT RATING.

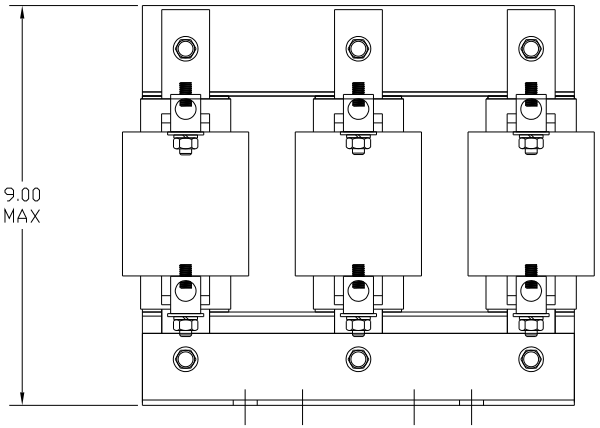

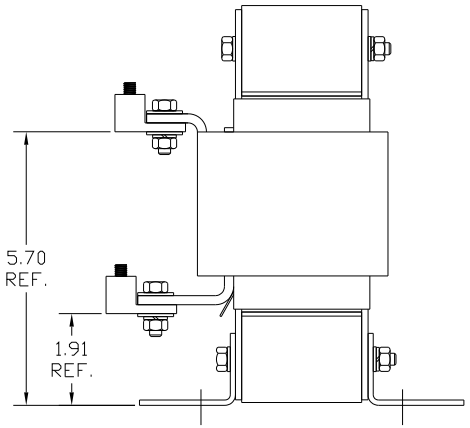

LUG WIRE RANGE FOR REACTOR.	2/0-6, AL OR CU.
TIGHTENING TORQUE.	120 LB-IN

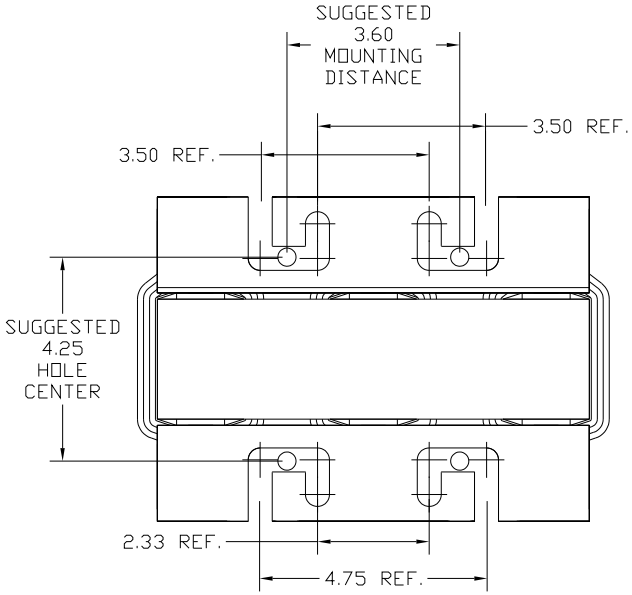

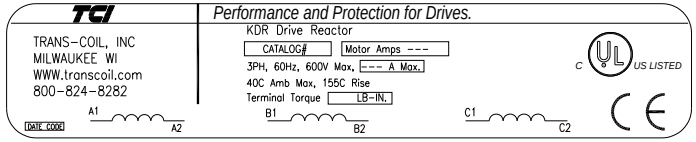

NO	REVISION	DATE	BY

TOLERANCES (EXCEPT AS NOTED)
DECIMAL .XX ± .03 .XXX ± .010
FRACTIONAL ± 1/16
ANGULAR ± 1/2°

TCI 7878 N. 86th STREET MILWAUKEE, WI 53224

KDRUL OPEN (FRAME G) KDR DRIVE REACTOR

DRN. BY DSW | DATE 05/04/04 | DWG. NO. KDRULOPEN-22DG
SCALE 1/2"=1" | APRVD. | SHT. 1 OF 1