VOLTAGE 690V	NEC MOTOR HP	CATALOG NO	MOTOR HP AMPS	AMPS MAX	APPROX WT-LBS	TERMINAL HOLE SIZE
OUTPUT	300	KDRJ31PV	289	300	70	.44

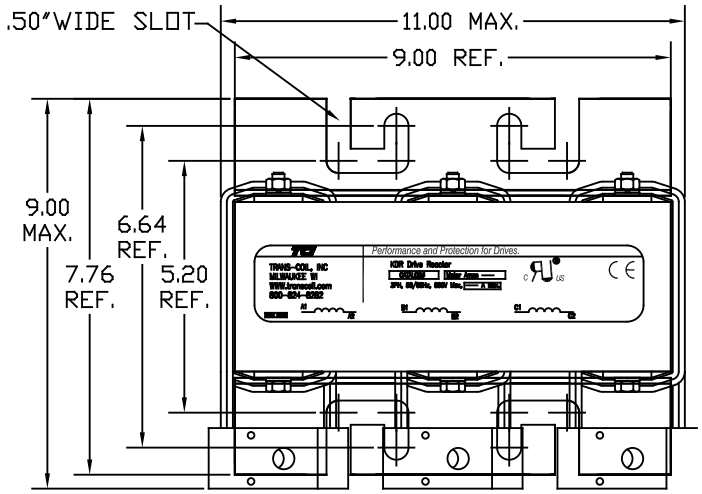

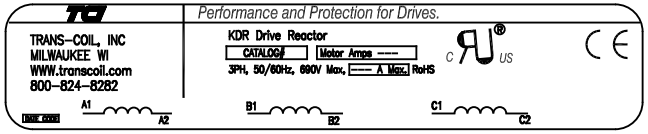

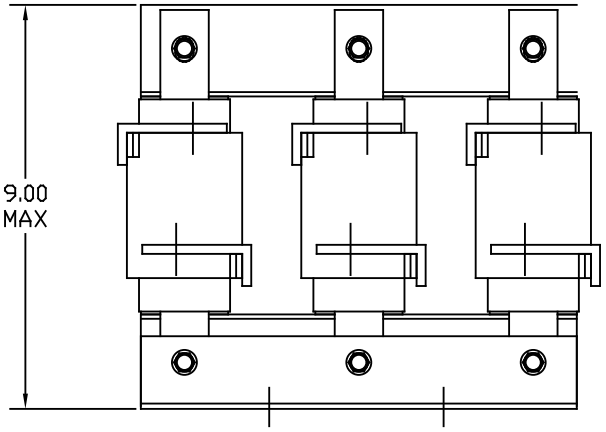

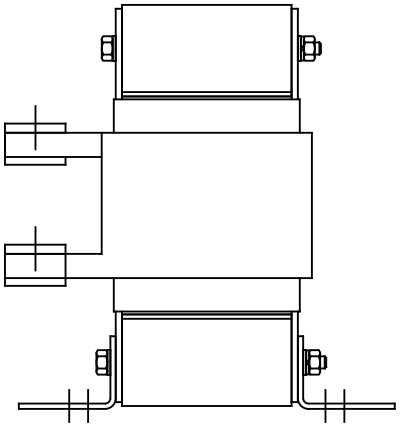

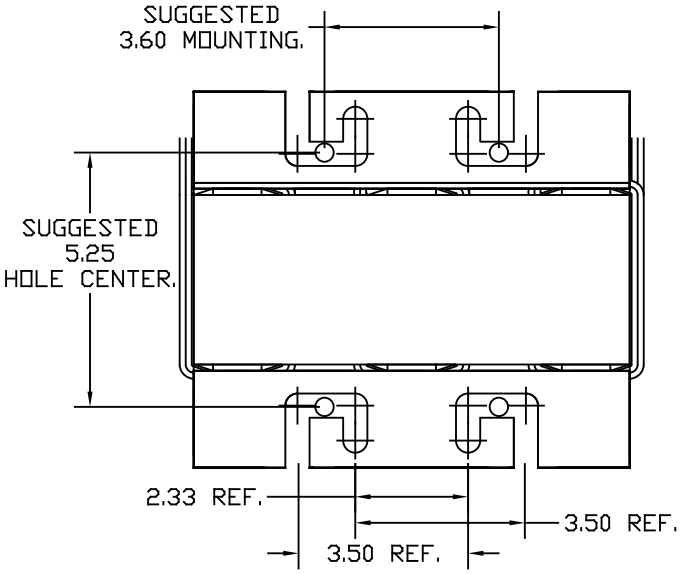

NO	REVISION	DATE	BY

TOLERANCES (EXCEPT AS NOTED)
DECIMAL
.XX ±.03
.XXX±.01
FRACTIONAL
± 1/32
ANGULAR
± 1/2°

TCI 7878 N. 86th STREET MILWAUKEE, WI 53224

KDR OUTPUT REACTOR 690V (J FRAME)

DRN. BY DSW | DATE 03/05/07 | DWG. NO. C KDRJ31PVDG
SCALE 1:4 | APRVD. | SHT. 1 OF 1